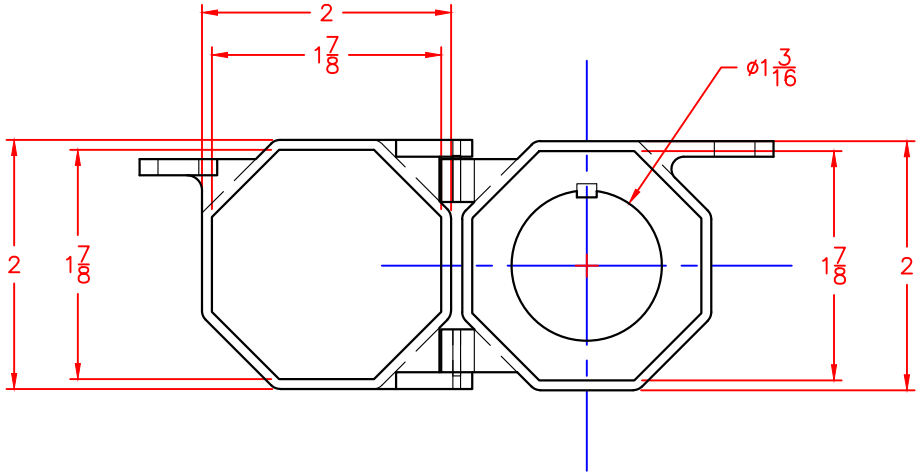

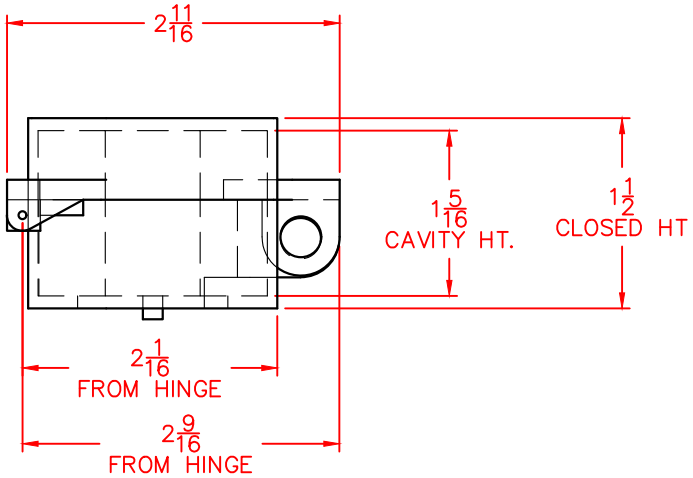

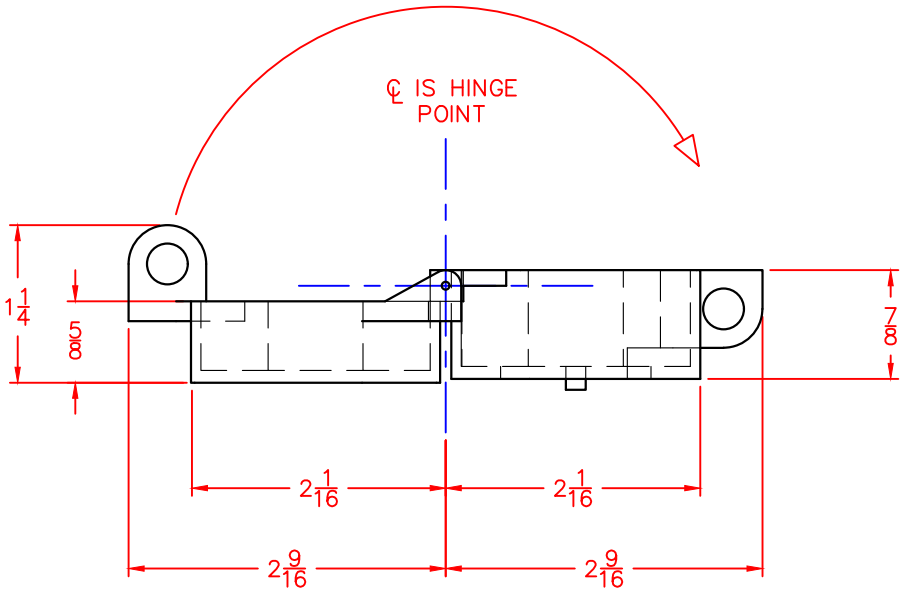

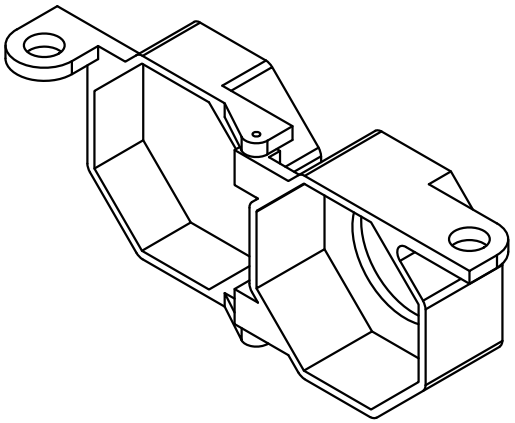

REV	DESCRIPTION	DATE	BY
XXX	XXXXXXXXXXX	XXXX	XXX
XXX	XXXXXXXXXXX	XXXX	XXX
XXX	XXXXXXXXXXX	XXXX	XXX
XXX	XXXXXXXXXXX	XXXX	XXX
XXX	XXXXXXXXXXX	XXXX	XXX
XXX	XXXXXXXXXXX	XXXX	XXX
XXX	XXXXXXXXXXX	XXXX	XXX

30MM PRODUCT LINE
FULL COVER
LOCKOFF ATTACHMENT
DATA SHEET

DRAWN BY: RCG

DATE: 11-05-01

CONTROL CONCEPTS CORP.
P.O. BOX 496
664 STATE STREET
BEAVER, PA 15009

SCALE: 1:1

DRAWING NO. WC10094