CONTROL STATION ENCLOSURES

We offer an impressive line of enclosures in five different constructions: polyester, polycarbonate, die-cast aluminum, carbon steel, and stainless steel. We also offer custom control stations that can be configured and assembled to meet your particular needs.

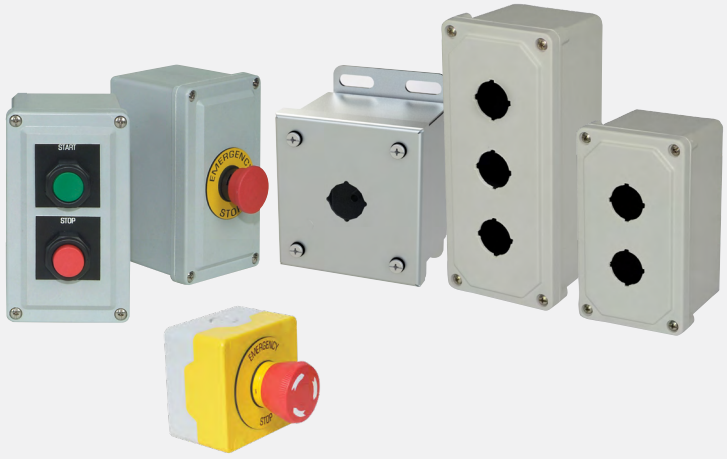

Non-Metallic Enclosures

Polyester 4
Polycarbonate 6

Metallic Enclosures

Die-Cast Aluminum 9
Carbon steel 11
Stainless steel type 304 14
Stainless steel 316/316L 14

PROVEN

c UL us LISTED

Conformity to Standards:
UL 50
CSA C22.2 No. 94
IEC 60529

Certifications:
UL File #: E470986
CSA Certified
CE Marked (per EU Low Voltage Directive 2014/35/EC and RoHS Directive 2011/65/EU)

Visit c3controls.com to download product certifications.

NOTE: The scope (range, description, price, specifications, dimensions, etc.) of the product featured in this section is subject to change without notice. Refer to www.c3controls.com for product updates.
REVISION 09.2026

CONTROL STATION ENCLOSURES

All our products are fully certified, rated, and backed by our 36-month warranty to meet the needs of the machine builder, and our Series EC Control Station Enclosures are no exception. Check out the incredible features in the chart below!

DELIVERING SUPERIOR PRODUCT QUALITY AND MANUFACTURING EXCELLENCE

✓ **Proven**	Our enclosures meet UL, CSA and IEC standards requirements.
✓ **Durable Construction**	Available in polyester, polycarbonate, die-cast aluminum, carbon steel, and stainless steel in a variety of sizes and configurations.
✓ **Standard Control Stations**	Our most popular control stations are available as standard in five sizes and up to three units—guaranteed for same-day shipping.
✓ **Custom Control Stations**	Specify your needs, and c3controls will configure, assemble and ship it as a single unit.
✓ **Flexibility**	We offer the flexibility of standard assembled control stations with 30mm and 22mm pilot devices as well as enclosed motor control assemblies, enclosed disconnect switches and enclosed motor protection circuit breakers. You can also order an enclosure with up to four holes you'll assemble yourself.
✓ **Easy to Install**	Fully assembled and ready to use out of the box.
✓ **General Use**	We've designed our polyester control stations for common electrical and electronic applications.
✓ **Modular Design**	Our 30mm and 22mm pilot devices' interchangeable modular design provides endless options for operator interface—reducing inventory.
✓ **Environmentally Secure**	A variety of seals keep dust and moisture out of our enclosures.
✓ **36-Month Warranty***	Every product is backed by our 36-Month Warranty—giving you confidence in the quality, reliability, and performance of components designed for the most demanding applications.
✓ **Guaranteed Availability***	Any order for standard catalog items received by 6:00pm ET is guaranteed to ship same-day. NOTE: Custom Control Stations and Enclosed Motor Control assemblies are not available for guaranteed same-day shipping.
✓ **Advantage Pricing**	Our approach to product development, manufacturing, and focus on servicing the OEM and Electrical Equipment Builder reduces cost. The result—the best value in the industry.

*See c3controls Terms & Conditions

> *c3controls offers a point of differentiation providing desirable and reliable products that meet a price point affording us a competitive advantage to stay ahead of the game.*
>
> Scott Morasch, President • **Isaacs & Associates, Inc.**

Polyester



Polycarbonate



Die-Cast Aluminum



Carbon Steel & Stainless Steel



UNIQUE PRODUCT LINE FEATURES

ENCLOSURES



Available in polyester, polycarbonate, and die cast aluminum—all with durable construction and guaranteed for same-day shipping.

STANDARD CONTROL STATIONS



One unit Emergency Stop red mushroom push button and two unit red and green push button control stations are available for guaranteed same-day shipping.

CUSTOM CONTROL STATIONS



Configure custom control stations in a variety of sizes and materials and we'll assemble it for you. Call for details. Note: Not available for guaranteed same-day shipping.

DURABLE CONSTRUCTION



Carbon steel and stainless steel (Type 304 and Type 316/316L) available, all with durable construction. Contact Customer Care for lead time and availability.

STAINLESS STEEL ENCLOSURES



Type 304 and 316/316L options provide superior corrosion resistance and hygienic, durable construction to enclose standard pilot devices in wet or hosed-down areas and corrosive atmospheres.

FIND IT FAST

Control Station Enclosures

- Certifications
- Specifications
- Dimension Drawings
- Installation Instructions
- Easy to Buy

c3controls.com

POLYESTER ENCLOSURES AND CONTROL STATIONS



NOTE: Design subject to change without notice.
Consult factory for current list price and dimensions.

DISCOUNT SCHEDULE H

Construction

- Available for 30mm and 22mm pilot devices.
- Solid fiberglass reinforced polyester construction, lightweight with high impact resistance.
- Non-conductive double insulated material.
- Formed-In-Place (FIP) continuous polyurethane gasket that provides a complete watertight, dust tight environmental seal.
- Recessed captive 316 Series stainless steel cover screws.
- Designed for general electrical and electronic applications and any application that has an associated environmental concern.
- Soft edge design reduces dust and other particle corrosion.
- Watertight, non corrosive, environmental design.
- UV and chemical resistant.
- Punched enclosures feature notched keyholes for both 30mm and 22mm styles.
- Standard color: RAL 7035
- Our standard enclosures featured on this page are available for guaranteed same-day shipping, our custom control stations and enclosed motor control assemblies are not.
- Available as fully-assembled control stations.

Ratings / Approvals

- Type 1, 2, 3, 3R, 4X, 12, 13, and IP66
- RoHS Compliant

30MM POLYESTER ENCLOSURES AND CONTROL STATIONS

CODE	# OF UNITS	FRAME DIMENSIONS (H x W x D)	COLOR	LIST
CS1	1	6-5/8" x 3-13/16" x 3-29/32" (168mm x 96.8mm x 99.3mm)	RAL 7035	$133.00
CS2	2	6-5/8" x 3-13/16" x 3-29/32" (168mm x 96.8mm x 99.3mm)	RAL 7035	$137.00
CS3	3	8-7/8" x 3-13/16" x 3-29/32" (225.4mm x 96.8mm x 99.3mm)	RAL 7035	$145.00

22MM POLYESTER ENCLOSURES AND CONTROL STATIONS

CODE	# OF UNITS	FRAME DIMENSIONS (H x W x D)	COLOR	LIST
22CS1	1	6-5/8" x 3-13/16" x 3-29/32" (168mm x 96.8mm x 99.3mm)	RAL 7035	$133.00
22CS2	2	6-5/8" x 3-13/16" x 3-29/32" (168mm x 96.8mm x 99.3mm)	RAL 7035	$137.00
22CS3	3	6-5/8" x 3-13/16" x 3-29/32" (168mm x 96.8mm x 99.3mm)	RAL 7035	$145.00
22CS4	4	8-7/8" x 3-13/16" x 3-29/32" (225.4mm x 96.8mm x 99.3mm)	RAL 7035	$165.00

NOTE: Mounting feet available, consult factory.

30MM POLYESTER ENCLOSURES AND CONTROL STATIONS

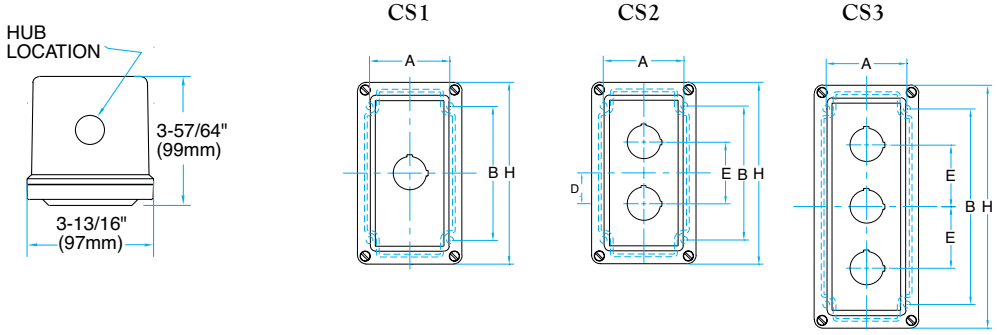

- Spacing designed to accompany standard, short and tall legend plates.
- All operator holes are 1-3/16" (30.16mm) diameter.
- See hub chart below for drilled hole sizes. All hub holes are centered on bottom face of custom enclosures unless otherwise specified.
- Polyester enclosure depth accommodates two 30mm contact blocks deep for a total of four circuits.

30MM POLYESTER HUB HOLE SIZE

CONDUIT SIZE	DRILL HOLE SIZE
1/2" (12.7mm)	7/8" (22.5mm)
3/4" (19.1mm)	1-1/16" (57.2mm)
1" (25.4mm)	1-5/16" (33.3mm)

30MM POLYESTER ENCLOSURE AND CONTROL STATION SIZES & HOLE LOCATIONS

PART #	H	A	B	D	E
CS1	6-5/8" (168mm)	2-15/16" (74.6mm)	4-7/8" (123.8mm)	—	—
CS2	6-5/8" (168mm)	2-15/16" (74.6mm)	4-7/8" (123.8mm)	1-1/8" (28.5mm)	2-1/4" (57.2mm)
CS3	8-7/8" (225.4mm)	2-15/16" (74.6mm)	7-1/8" (181mm)	—	2-1/4" (57.2mm)

22MM POLYESTER ENCLOSURES AND CONTROL STATIONS

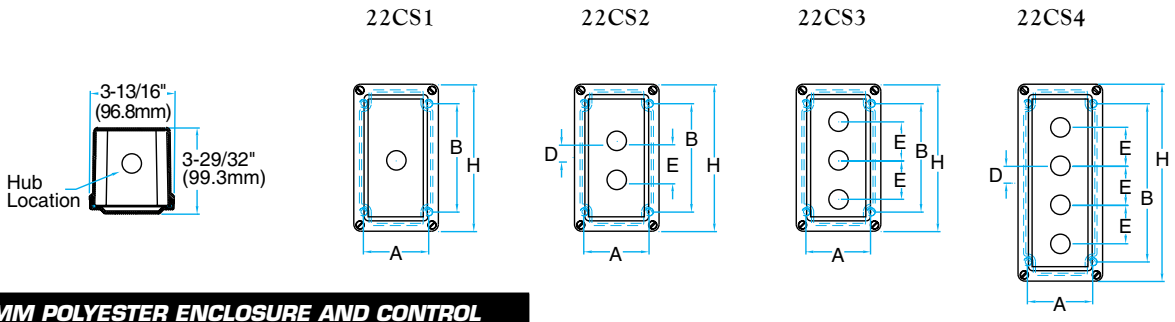

22MM POLYESTER ENCLOSURE AND CONTROL STATION SIZES & HOLE LOCATIONS

PART #	H	A	B	D	E
22CS1	6-5/8" (168mm)	2-15/16" (74.6mm)	4-7/8" (123.8mm)	—	—
22CS2	6-5/8" (168mm)	2-15/16" (74.6mm)	4-7/8" (123.8mm)	25/32" (19.8mm)	1-9/16" (39.6mm)
22CS3	6-5/8" (168mm)	2-15/16" (74.6mm)	4-7/8" (123.8mm)	—	1-9/16" (39.6mm)
22CS4	8-7/8" (225.5mm)	2-15/16" (74.6mm)	7-1/8" (181mm)	25/32" (19.8mm)	1-9/16" (39.6mm)

22MM POLYESTER HUB SIZE

See 30mm Polyester Hub Hole Size chart above for conduit and drill hole size.

- Spacing designed to accompany short legend plates. Consult the factory for standard, tall, jumbo and special legend plate options.
- All operator holes are 7/8" (22.5mm) diameter.
- See hub chart on left for drilled hole sizes. All hub holes are centered on bottom face of custom enclosures unless otherwise specified.
- Polyester enclosure depth accommodates two 22mm IEC contact blocks deep.

POLYCARBONATE ENCLOSURES AND CONTROL STATIONS



DISCOUNT SCHEDULE H

Construction

- Available for 30mm and 22mm pilot devices, and disconnect switches.
- Rugged polycarbonate construction, high quality and sealed.
- High temperature neoprene gasket.
- Highly efficient seal provides ingress protection against dust and moistures.
- For greater mechanical protection, the cover gasket is housed in a recess in the lid which mates up with a tongue.
- Standard quarter turn quick release lid fixings.
- Oil and corrosion resistant.
- Standard color: Light Grey



- Our standard enclosures featured on this page are available for guaranteed same-day shipping, our custom control stations and enclosed motor control assemblies are not.

Ratings / Approvals

- Type 1, 4/4X, 12 and IP65
- IP65 protection for watertight and dust-tight construction
- Application Temperature Range: -40°C to 80°C (-40°F to 176°F)

NOTE: Design subject to change without notice. Consult factory for current list price and dimensions.

30MM POLYCARBONATE STANDARD ENCLOSURES (NOT RECOMMENDED FOR H-LINE)

CODE	# OF UNITS	LIST
PC1	1	$ 76.00
PC2	2	$ 80.00
PC3	3	$104.00

22MM POLYCARBONATE STANDARD ENCLOSURES

CODE	# OF UNITS	LIST
22PC1	1	$ 76.00
22PC2	2	$ 80.00
22PC3	3	$104.00

DISCONNECTS POLYCARBONATE STANDARD ENCLOSURES

CODE	# OF UNITS	LIST
PCDSEN	Up to 3 Poles	$ 64.00
PCDSEN45	Up to 5 Poles	$104.00

30MM POLYCARBONATE ENCLOSURES AND CONTROL STATIONS

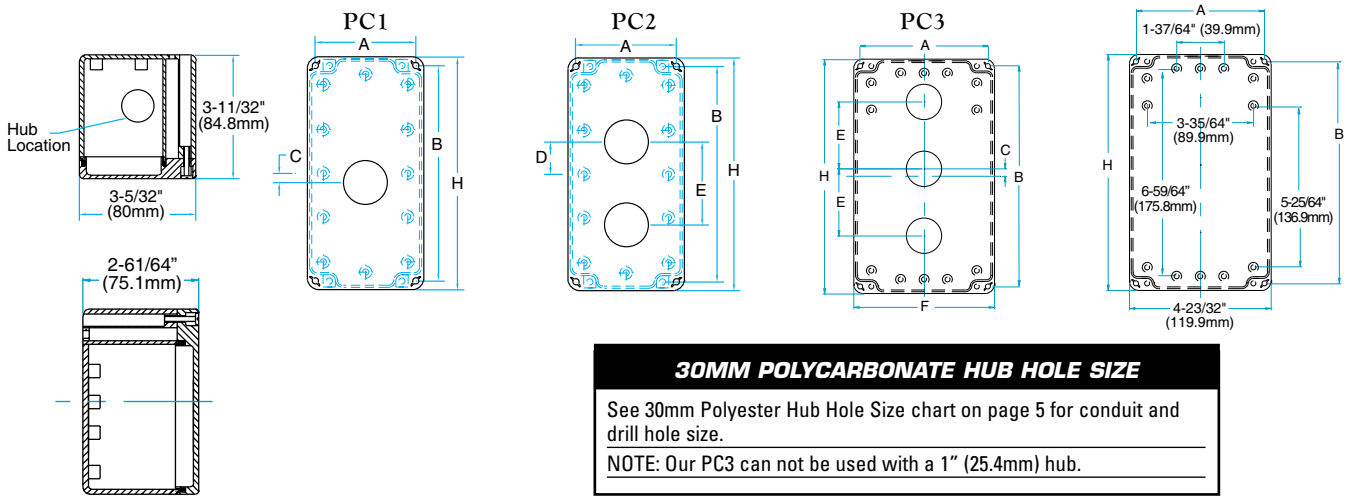

30MM POLYCARBONATE HUB HOLE SIZE

See 30mm Polyester Hub Hole Size chart on page 5 for conduit and drill hole size.

NOTE: Our PC3 can not be used with a 1" (25.4mm) hub.

30MM POLYCARBONATE ENCLOSURE AND CONTROL STATION SIZES & HOLE LOCATIONS

PART #	H	A	B	C	D	E	F
PC1	6-19/64" (160mm)	2-23/32" (69.1mm)	5-53/64" (148.1mm)	1/4" (6.4mm)	—	—	—
PC2	6-19/64" (160mm)	2-23/32" (69.1mm)	5-53/64" (148.1mm)	—	7/8" (22.2mm)	2-1/4" (57.2mm)	—
PC3	7-7/8" (200.2mm)	4-19/64" (109.2mm)	7-13/33" (188.2mm)	1/4" (6.4mm)	—	2-1/4" (57.2mm)	4-47/64" (120.1mm)

- Spacing designed to accompany standard, short and tall legend plates.
- All operator holes are 1-3/16" (30.2mm) diameter.
- See hub chart for drilled hole sizes. All hub holes are centered on bottom face of custom enclosures unless otherwise specified.

22MM POLYCARBONATE ENCLOSURES AND CONTROL STATIONS

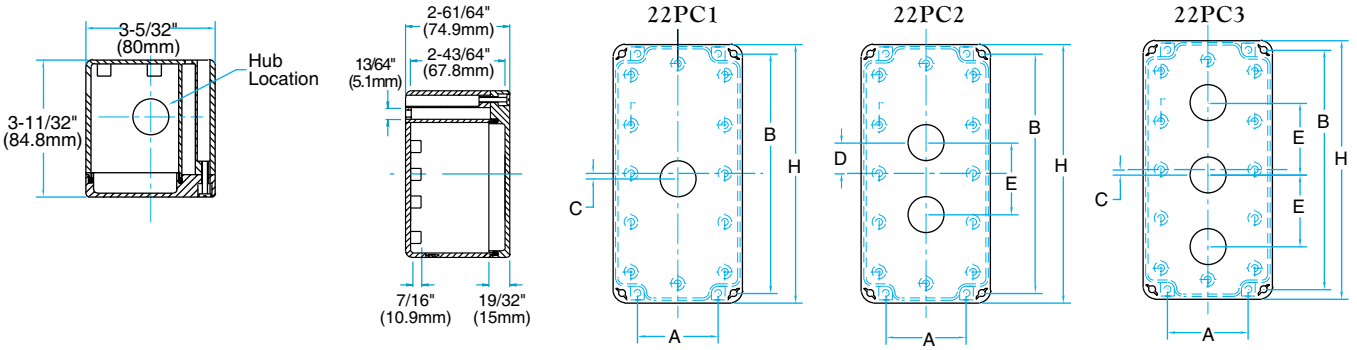

22MM POLYCARBONATE HUB HOLE SIZE

See 22mm Polyester Hub Hole Size chart on page 5 for conduit size and drill hole size.

22MM POLYCARBONATE ENCLOSURE AND CONTROL STATION SIZES & HOLE LOCATIONS

PART #	H	A	B	C	D	E
22PC1	6-19/64" (160mm)	1-31/32" (50mm)	5-53/64" (148.1mm)	1/8" (3.2mm)	—	—
22PC2	6-19/64" (160mm)	1-31/32" (50mm)	5-53/64" (148.1mm)	—	3/4" (19.1mm)	1-3/4" (44.4mm)
22PC3	6-19/64" (160mm)	1-31/32" (50mm)	5-53/64" (148.1mm)	1/8" (3.2mm)	—	1-3/4" (44.4mm)

- Spacing designed to accompany standard and short legend plates, consult the factory for tall, jumbo and special legend plate options.
- All operator holes are 7/8" (22.5mm) diameter.
- See hub chart for drilled hole sizes. All hub holes are centered on bottom face of custom enclosures unless otherwise specified.
- Polycarbonate enclosure depth accommodates one 22mm IEC contact block deep when using a 22mm IEC selector switch or two 22mm IEC contact blocks deep with all other 22mm IEC pilot devices. 22mm NEMA pilot devices may use up to three contact blocks deep.

DISCONNECT POLYCARBONATE ENCLOSURES AND CONTROL STATIONS

PCDSEN

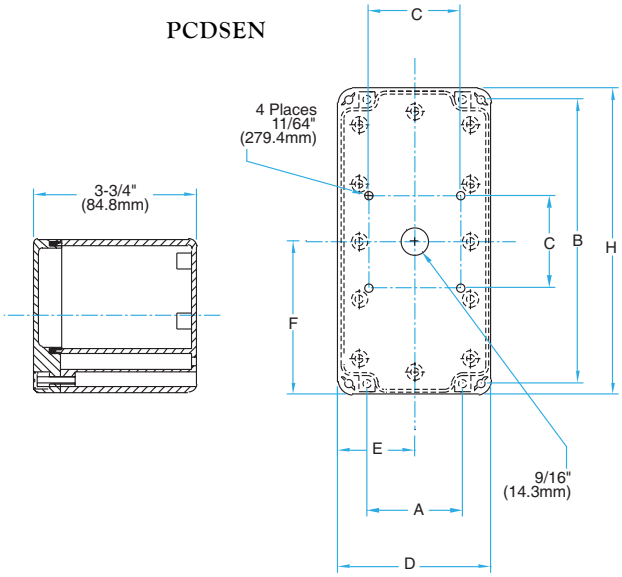

PCDSEN45

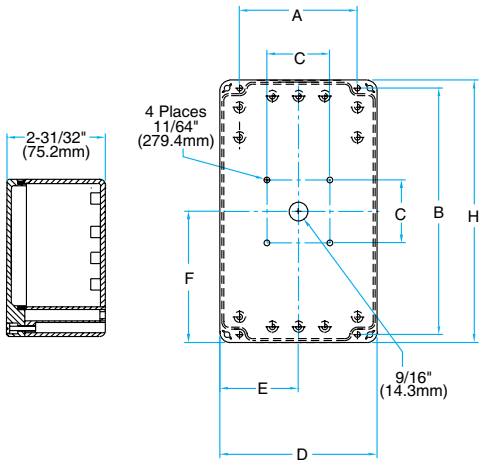

- See hub chart for drilled hole sizes. All hub holes are centered on bottom face of custom enclosures unless otherwise specified.

DISCONNECT POLYCARBONATE HUB HOLE SIZE

See 30mm Polyester Hub Hole Size chart on page 5 for conduit size and drill hole size.

NOTE: Our PCDSEN45 cannot be used with a 1" (25.4mm) hub.

DISCONNECT POLYCARBONATE ENCLOSURE AND CONTROL STATION SIZES & HOLE LOCATIONS

PART #	H	A	B	C	D	E	F
PCDSEN	6-19/64" (160mm)	1-31/32" (50mm)	5-53/64" (148.1mm)	1-27/64" (36mm)	3-5/32" (80mm)	1-37/64" (40.1mm)	3-5/32" (80mm)
PCDSEN45	7-7/8" (200.2mm)	3-35/64" (90.2mm)	7-13/32" (187.9mm)	1-27/64" (36mm)	4-47/64" (120.1mm)	2-23/64" (59.9mm)	3-15/16" (100.1mm)

DIE CAST ALUMINUM ENCLOSURES AND CONTROL STATIONS



DISCOUNT SCHEDULE **H**

c UL us

NOTE: Design subject to change without notice. Consult factory for current list price and dimensions.

CONSTRUCTION

- Available for 30mm and 22mm pilot devices.
- Die cast aluminum alloy construction.
- High temperature neoprene gaskets are oil and petroleum resistant.
- Highly efficient seal provides ingress protection against dust and moistures.
- For greater mechanical protection, the cover gasket is housed in a recess in the lid which mates up with a tongue.
- Oil and corrosion resistant.
- Stainless steel captive lid retaining screws.
- Standard finish: Smooth powder coat Grey (RAL 7001).
- Our standard enclosures featured on this page are available for guaranteed same-day shipping, our custom control stations and enclosed motor control assemblies are not.

RATINGS / APPROVALS

- Type 1, 3R, 4, 12, IP66 and IP67
- IP66 protection with a working temperature within -40°C to +90°C (-40°F to 194°F)

30MM DIE CAST ALUMINUM STANDARD ENCLOSURES (NOT RECOMMENDED FOR H-LINE)

CODE	# OF UNITS	FRAME DIMENSIONS (H x W x D)	COLOR	LIST
DC1	1	4-59/64" x 3-5/32" x 2-9/32" (125mm x 80mm x 57.9mm)	Smooth Powder Coat Grey	$130.00
DC2	2	6-7/8" x 3-5/32" x 2-9/32" (174.75mm x 80mm x 57.91mm)	Smooth Powder Coat Grey	$150.00
DC3	3	9-13/16" x 3-5/32" x 2-3/64" (249.2mm x 80mm x 52mm)	Smooth Powder Coat Grey	$190.00

22MM DIE CAST ALUMINUM STANDARD ENCLOSURES)

CODE	# OF UNITS	FRAME DIMENSIONS (H x W x D)	COLOR	LIST
22DC1	1	4-59/64" x 3-5/32" x 2-9/32" (125mm x 80mm x 57.9mm)	Smooth Powder Coat Grey	$130.00
22DC2	2	4-59/64" x 3-5/32" x 2-9/32" (125mm x 80mm x 57.9mm)	Smooth Powder Coat Grey	$150.00
22DC3	3	6-5/8" x 3-5/32" x 2-9/32" (168.4mm x 80mm x 57.9mm)	Smooth Powder Coat Grey	$190.00

30MM DIE CAST ALUMINUM ENCLOSURES AND CONTROL STATIONS

- Spacing designed to accompany standard, short and tall legend plates.
- All operator holes are 1-3/16" (30.2mm) diameter.
- See hub chart below for drilled hole sizes. All hub holes are centered on bottom face of custom enclosures unless otherwise specified.
- Die cast enclosure depth accommodates one contact block.

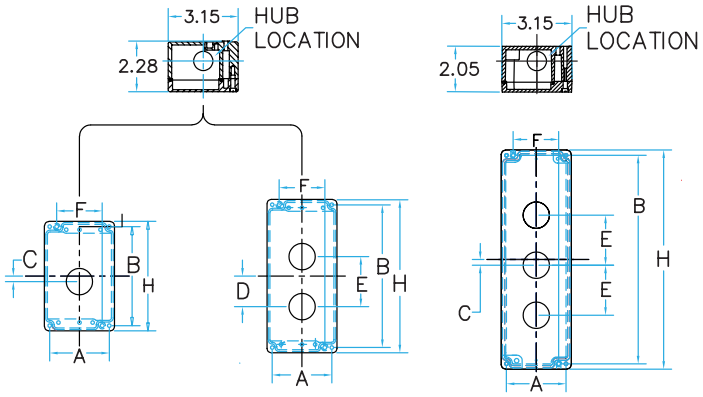

30MM DIE CAST HUB HOLE SIZE

CONDUIT SIZE	DRILL HOLE SIZE
1/2" (12.7mm)	7/8" (22.5mm)

30MM DIE CAST ENCLOSURE AND CONTROL STATION SIZES & HOLE LOCATIONS

PART #	H	A	B	C	D	E	F
DC1	4-59/64" (125mm)	2-11/16" (68.1mm)	4-29/64" (113mm)	1/4" (6.35mm)	—	—	2-3/64" (52mm)
DC2	6-7/8" (174.75mm)	2-11/16" (68.1mm)	6-13/32" (162.8mm)	—	1-3/8" (34.9mm)	2-1/4" (57.2mm)	2-3/64" (52mm)
DC3	9-13/16" (249.2mm)	2-11/16" (68.1mm)	9-11/32" (237mm)	1/4" (6.35mm)	—	2-1/4" (57.2mm)	2-3/64" (52mm)

22MM NEMA DIE CAST ALUMINUM ENCLOSURES AND CONTROL STATIONS

- Spacing designed to accompany standard and short legend plates, consult the factory for tall, jumbo and special legend plate options.
- All operator holes are 7/8" (22.5mm) diameter.
- See hub chart below for drilled hole sizes. All hub holes are centered on bottom face of custom enclosures unless otherwise specified.
- 3/4" (19.1mm) and 1" (25.4mm) hubs not available, consult factory for options.

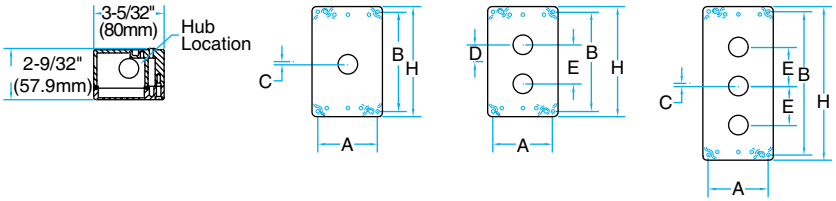

22MM DIE CAST HUB HOLE SIZE

CONDUIT SIZE	DRILL HOLE SIZE
1/2" (12.7mm)	7/8" (22.5mm)

22MM DIE CAST ENCLOSURE AND CONTROL STATION SIZES & HOLE LOCATIONS

PART #	H	A	B	C	D	E
22DC1	4-59/64" (125mm)	2-11/16" (68.1mm)	4-29/64" (113mm)	1/8" (3.2mm)	—	—
22DC2	4-59/64" (125mm)	2-11/16" (68.1mm)	4-29/64" (113mm)	—	3/4" (19.1mm)	1-3/4" (44.5mm)
22DC3	6-5/8" (168.4mm)	2-11/16" (68.1mm)	6-13/32" (162.8mm)	1/8" (3.2mm)	—	1-3/4" (44.5mm)

CARBON STEEL ENCLOSURES AND CONTROL STATIONS



DISCOUNT SCHEDULE H

NOTE: Not available for same day shipping. Contact customer first team for lead time.

Construction

- Available for 30mm and 22mm pilot devices
- Punched enclosures feature notched keyholes for both 30mm and 22mm styles
- Robust, rigid and durable Carbon steel construction, 0.063" (approx. 1.6 mm)
- Available in standard depth and extended depth to accommodate deeper 30 mm operators.
- Formed-In-Place (FIP) continuous polyurethane gasket that provides a complete watertight, dust tight environmental seal
- Captivated cover screws that thread into sealed wells, ensuring secure closure and preventing screw loss during operation/maintenance.
- Powder-coated finish ANSI-61 gray inside and out – protects underlying steel from corrosion and provides a clean, industrial appearance
- Solid metal body suitable for applications requiring mechanical strength, electromagnetic shielding or heavier duty than non-metallic enclosures.
- Available as fully-assembled control stations

Ratings / Approvals

- UL Type 1, 2, 4, 12, 13 and IP66
- RoHS Compliant

22MM CARBON STEEL ENCLOSURES AND CONTROL STATIONS

CODE	# OF UNITS	FRAME DIMENSIONS (H X W X D)	COLOR	LIST
22MCS1	1	3-1/2" × 3-1/4" × 2-3/4" (88.90mm x 82.55mm x 69.85 mm)	ANSI-61 GRAY	$128.00
22MCS2	2	5-3/4" × 3-1/4" × 2-3/4" (146.05mm × 82.55mm × 69.85mm)	ANSI-61 GRAY	$146.00
22MCS3	3	8" × 3-1/4" × 2-3/4" (203.20mm × 82.55mm × 69.85mm)	ANSI-61 GRAY	$202.00

30MM CARBON STEEL ENCLOSURES AND CONTROL STATIONS

CODE	# OF UNITS	FRAME DIMENSIONS (H X W X D)	COLOR	LIST
MCS1	1	3-1/2" × 3-1/4" × 2-3/4" (88.90mm x 82.55mm x 69.85 mm)	ANSI-61 GRAY	$128.00
MCS2	2	5-3/4" × 3-1/4" × 2-3/4" (146.05mm × 82.55mm × 69.85mm)	ANSI-61 GRAY	$146.00
MCS3	3	8" × 3-1/4" × 2-3/4" (203.20mm × 82.55mm × 69.85mm)	ANSI-61 GRAY	$202.00

30MM CARBON STEEL ENCLOSURES AND CONTROL STATIONS WITH EXTENDED DEPTH (RECOMMENDED FOR H-LINE)

CODE	# OF UNITS	FRAME DIMENSIONS (H X W X D)	COLOR	LIST
MCS1X	1	4" × 4" × 4-3/4" (101.60mm × 101.60mm × 120.65mm)	ANSI-61 GRAY	$164.00
MCS2X	2	6" × 4" × 4-3/4" (152.40mm × 101.60mm × 120.65mm)	ANSI-61 GRAY	$189.00
MCS3X	3	8" × 4" × 4-3/4" (203.20mm × 101.60mm × 120.65mm)	ANSI-61 GRAY	$215.00

22MM CARBON STEEL ENCLOSURES AND CONTROL STATIONS

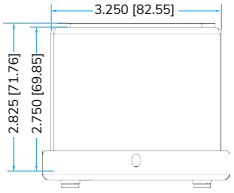

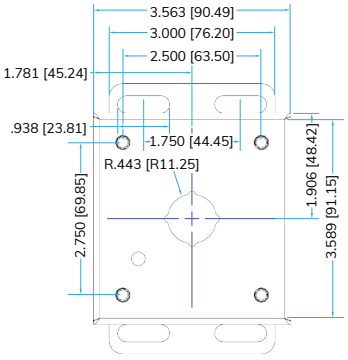

22MCS1

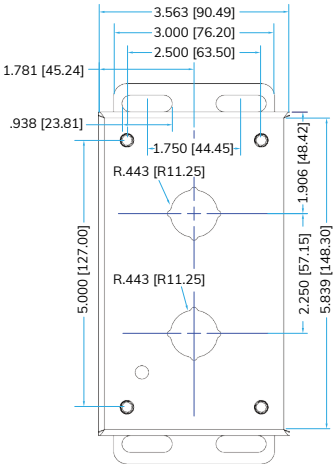

22MCS2

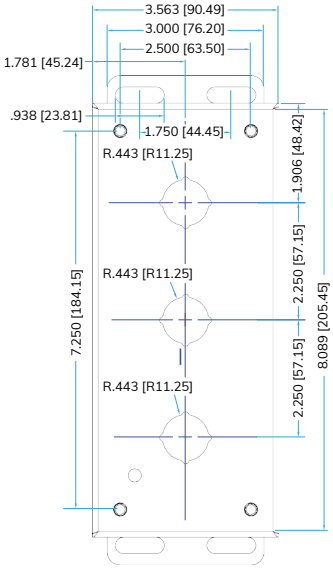

22MCS3

- Spacing is designed to accommodate standard and short legend plates. Consult the factory for tall, jumbo, and special legend plate options.
- All operator holes are 7/8" (22.5mm) in diameter.
- Carbon steel enclosure depth accommodates three 22mm IEC contact blocks deep.

30MM CARBON STEEL ENCLOSURES AND CONTROL STATIONS

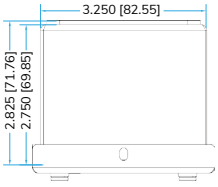

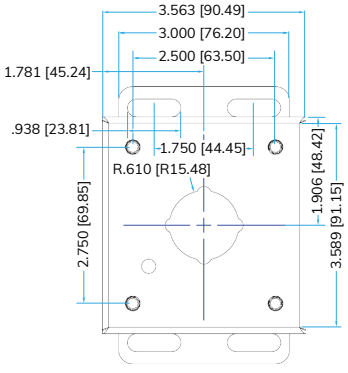

MCS1

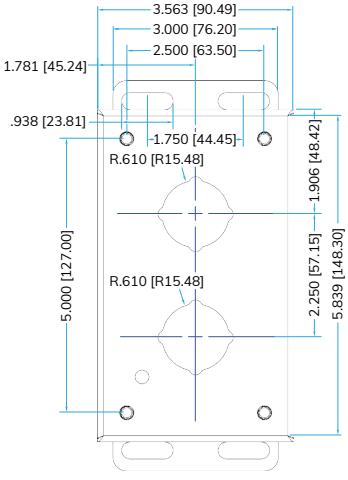

MCS2

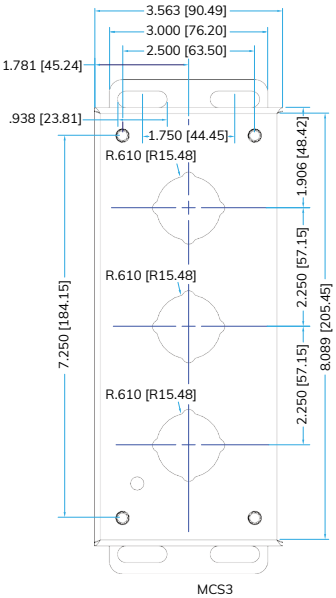

MCS3

30MM CARBON STEEL ENCLOSURES AND CONTROL STATIONS WITH EXTENDED DEPTH

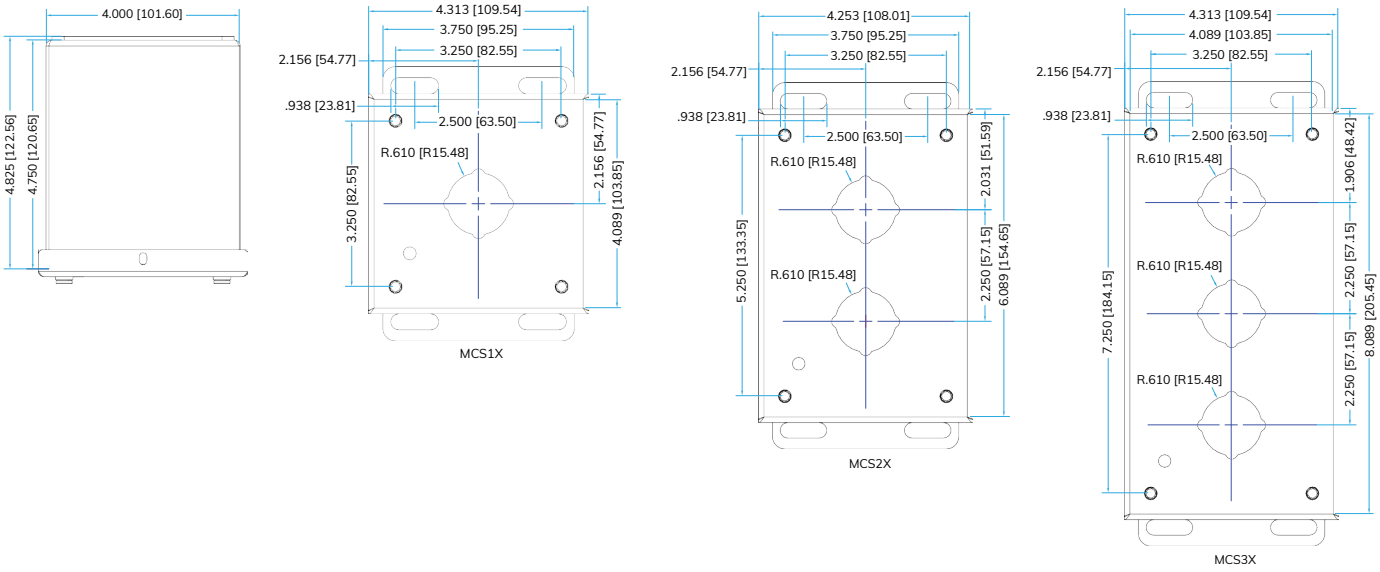

- Spacing is designed to accommodate standard and short legend plates. Consult the factory for tall, jumbo, and special legend plate options.
- All operator holes are 1-7/32" (30.96mm) in diameter.
- Carbon steel enclosure depth accommodates three 22mm IEC contact blocks deep.
- Extended-depth enclosure can accommodate 30mm Operator with integrated Power reed contact block.

STAINLESS STEEL ENCLOSURES AND CONTROL STATIONS



NOTE: Not available for same day shipping. Contact customer first team for lead time

DISCOUNT SCHEDULE H

Construction

- Available for 30mm and 22mm pilot devices
- Punched enclosures feature notched keyholes for both 30mm and 22mm styles
- Stainless steel construction Type 304 and 316/316L for enhanced corrosion resistance in harsh or chemical/frequent washdown applications
- Available in standard depth and extended depth to accommodate deeper 30mm operators.
- Formed-In-Place (FIP) continuous polyurethane gasket that provides a complete watertight, dust tight environmental seal
- Captivated cover screws that thread into sealed wells, ensuring secure closure and preventing screw loss during operation/maintenance.
- Brushed stainless steel finish provides superior corrosion protection, a clean industrial appearance
- Solid stainless steel body ideal for applications requiring mechanical strength, impact resistance, hygiene and corrosion protection
- Well-suited for demanding industries such as food & beverage, pharmaceutical, marine, offshore, and wastewater applications where hygiene and durability are critical
- Available as fully-assembled control stations

Ratings / Approvals

- UL Type 1, 2, 4, 4X 12, 13 and IP66
- RoHS Compliant

22MM STAINLESS STEEL ENCLOSURES

CODE	# OF UNITS	FRAME DIMENSIONS (H X W X D)	MATERIAL GRADE	LIST
22SS1	1	3 1/2" × 3 1/4" × 2 3/4" (88.90mm x 82.55mm x 69.85 mm)	Type 304	$329.00
22SS2	2	5 3/4" × 3 1/4" × 2 3/4" (146.05mm × 82.55mm × 69.85mm)	Type 304	$412.00
22SS3	3	8" × 3 1/4" × 2 3/4" (203.20mm × 82.55mm × 69.85mm)	Type 304	$449.00
22SS61	1	3 1/2" × 3 1/4" × 2 3/4" (88.90mm x 82.55mm x 69.85 mm)	Type 316 / 316L	$410.00
22SS62	2	5 3/4" × 3 1/4" × 2 3/4" (146.05mm × 82.55mm × 69.85mm)	Type 316 / 316L	$513.00
22SS63	3	8" × 3 1/4" × 2 3/4" (203.20mm × 82.55mm × 69.85mm)	Type 316 / 316L	$558.00

30MM STAINLESS STEEL ENCLOSURES

CODE	# OF UNITS	FRAME DIMENSIONS (H X W X D)	MATERIAL GRADE	LIST
SS1	1	3 1/2" × 3 1/4" × 2 3/4" (88.90mm x 82.55mm x 69.85 mm)	Type 304	$329.00
SS2	2	5 3/4" × 3 1/4" × 2 3/4" (146.05mm × 82.55mm × 69.85mm)	Type 304	$412.00
SS3	3	8" × 3 1/4" × 2 3/4" (203.20mm × 82.55mm × 69.85mm)	Type 304	$449.00
SS61	1	3 1/2" × 3 1/4" × 2 3/4" (88.90mm x 82.55mm x 69.85 mm)	Type 316 / 316L	$410.00
SS62	2	5 3/4" × 3 1/4" × 2 3/4" (146.05mm × 82.55mm × 69.85mm)	Type 316 / 316L	$513.00
SS63	3	8" × 3 1/4" × 2 3/4" (203.20mm × 82.55mm × 69.85mm)	Type 316 / 316L	$558.00

30MM STAINLESS STEEL ENCLOSURES WITH EXTENDED DEPTH (RECOMMENDED FOR H-LINE)

CODE	# OF UNITS	FRAME DIMENSIONS (H X W X D)	MATERIAL GRADE	LIST
SS1X	1	4" × 4" × 4-3/4" (101.60mm × 101.60mm × 120.65mm)	Type 304	$438.00
SS2X	2	6" × 4" × 4-3/4" (152.40mm × 101.60mm × 120.65mm)	Type 304	$548.00
SS3X	3	8" × 4" × 4-3/4" (203.20mm × 101.60mm × 120.65mm)	Type 304	$583.00
SS61X	1	4" × 4" × 4-3/4" (101.60mm × 101.60mm × 120.65mm)	Type 316 / 316L	$545.00
SS62X	2	6" × 4" × 4-3/4" (152.40mm × 101.60mm × 120.65mm)	Type 316 / 316L	$682.00
SS63X	3	8" × 4" × 4-3/4" (203.20mm × 101.60mm × 120.65mm)	Type 316 / 316L	$726.00

22MM STAINLESS STEEL ENCLOSURES AND CONTROL STATIONS

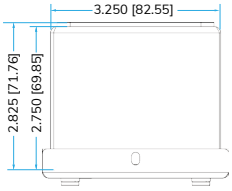

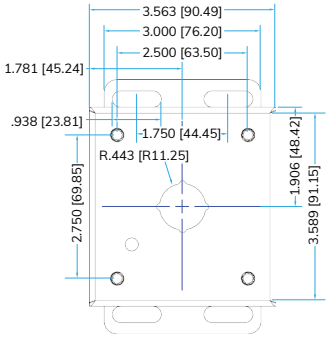

22SS1
22SS61

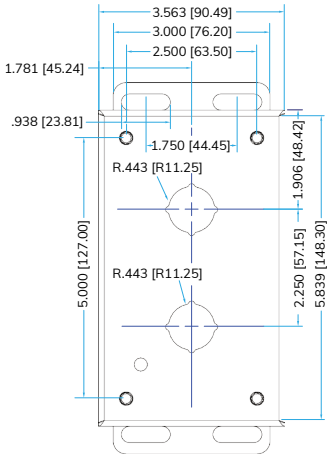

22SS2
22SS62

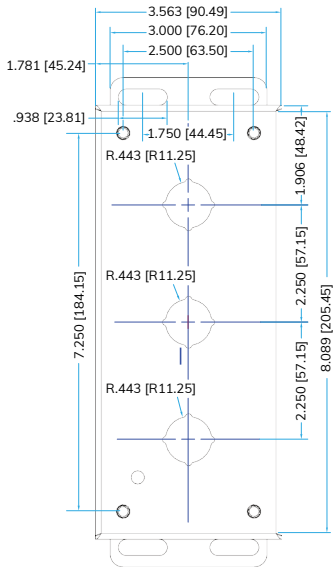

22SS3
22SS63

- Spacing is designed to accommodate standard and short legend plates. Consult the factory for tall, jumbo, and special legend plate options.
- All operator holes are 7/8" (22.5mm) in diameter.
- Stainless steel enclosure depth accommodates two 22mm IEC contact blocks deep.

30MM STAINLESS STEEL ENCLOSURES AND CONTROL STATIONS

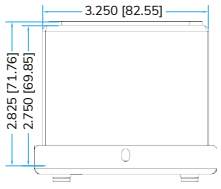

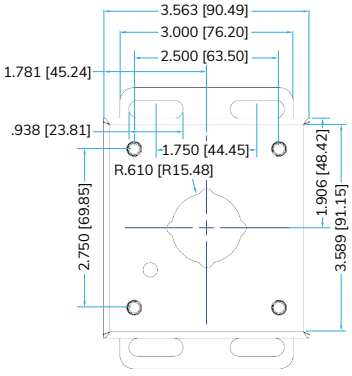

SS1
SS61

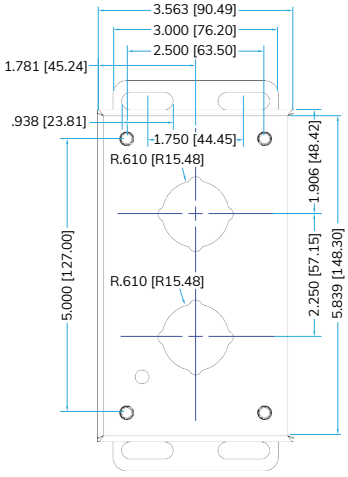

SS2
SS62

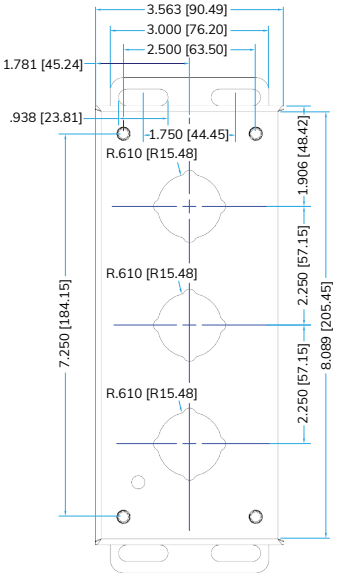

SS3
SS63

30MM STAINLESS STEEL ENCLOSURES AND CONTROL STATIONS WITH EXTENDED DEPTH

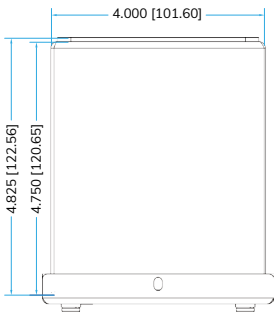

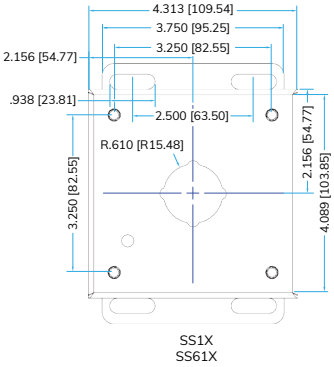

SS1X
SS61X

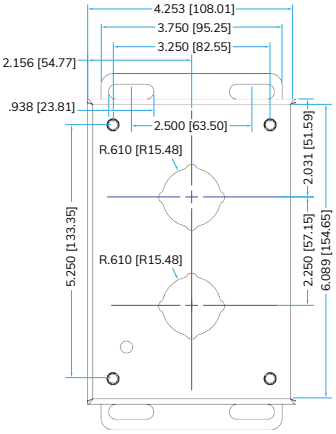

SS2X
SS62X

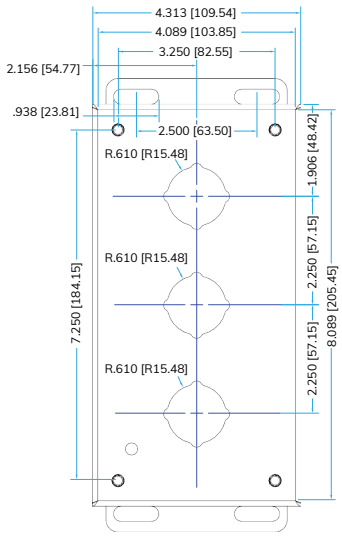

SS3X
SS63X

- Spacing is designed to accommodate standard and short legend plates. Consult the factory for tall, jumbo, and special legend plate options.
- All operator holes are 1-7/32" (30.96mm) in diameter.
- Stainless steel enclosure depth accommodates two 22mm IEC contact blocks deep.
- Extended-depth enclosure can accommodate 30mm Operator with integrated Power reed contact block.

CUSTOM CONTROL STATIONS



We'll configure and assemble enclosure stations in nearly any size and from a variety of materials to your specification. Ordering a custom enclosed control station is simple and offers advantages.

You'll order your custom job under a single catalog number and your control station will arrive already assembled which means a shorter bill of material on your end, saving you installation time and cost. And pre-assembly also makes your inventory easier to manage.

There is a $4.00 assembly charge per pilot device unit.
Example: A two-unit station will have an assembly charge of $8.00.

Custom control stations are not available for guaranteed same day shipping. Call us for pricing and an estimated date of delivery.

ADVANTAGES

- ✓ **Single catalog number**
- ✓ **No assembly required**
- ✓ **Shorter panel bill of material**
- ✓ **Easier to manage inventory**