WIRING DIAGRAMS

Electromechanical Terminal Block Relay

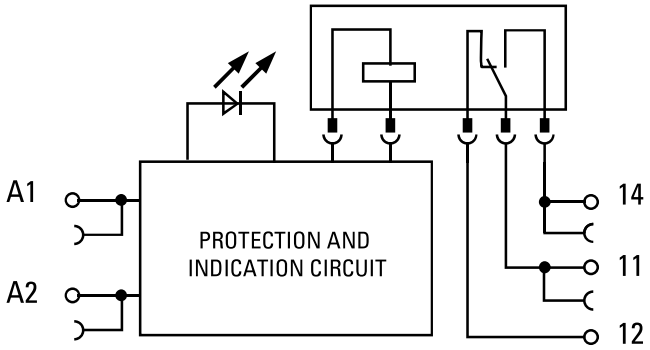

Solid State Terminal Block Relay

