22MM NEMA **PILOT DEVICES**

SERIES 22 PRODUCT PROFILE

c3controls' **22mm NEMA Pilot Devices** are for all those tight fitting places. Our non-illuminated momentary and maintained push buttons, pilot lights, and selector switches are compact and ready for field wiring in almost any environment. Full voltage operators are available in 12V AC/DC, 24V AC/DC, and 120V AC/DC.

DELIVERING THE MOST RUGGED 22MM NEMA DEVICES IN THE INDUSTRY

✓ Easy to Install	Our NEMA operators' compact and thin design comes with integral circuits ready for field wiring.
✓ Simple Customization	Our light modules come with various lens color options for appropriate operator interface, and feature LED lamps with leakage protection.
✓ Rugged Design	Optional polyester or polished aluminum clamp rings with coarse 16 pitch threads for quick and easy utilization that won't cross thread or strip.
✓ Visible Certifications	Our product certifications and electrical ratings are clearly marked on the outside of the contact blocks for easy reference during installation.
✓ Heavy Duty	Polyester construction provides superior durability, corrosion resistance, moisture rejection and electrical insulation.
✓ Flexible	Our "Add-On" Contact Blocks can be added to the basic operator to increase the number and type of contacts. Up to 3 blocks with 2 circuits each may be added, giving a total of 8 contacts per operator.
✓ Convenient	Reduce inventory with our interchangeable modular design, providing endless options for appropriate operator interface.
✓ Environmentally Secure	With 4/4X and IP65 ratings, our 22mm line of Pilot Devices are built to last and withstand dust, corrosion, ice, and rain.
✓ 36-Month Warranty*	Every product is backed by our 36-Month Warranty—giving you confidence in the quality, reliability, and performance of components designed for the most demanding applications.
✓ Guaranteed Same-Day Shipping*	Product availability reduces inventory, and improves cash-flow—saving you money. With c3controls any order for standard catalog items received by 6:00pm ET is guaranteed to ship same-day.
✓ Advantage Pricing	Our approach to product development, manufacturing, and focus on servicing the OEM and Electrical Equipment Builder reduces cost. The result—the best value in the industry.

*See c3controls Terms & Conditions

UNIQUE FEATURES

Metal on the inside—where it counts!

- c3controls Maintained Push Buttons contain a solid brass detent mechanism ensuring reliable operation in emergency stop applications, and providing safe interruption of circuits and longer life.

U-Cup Seal

- Our revolutionary U-Cup seal is infused with a Teflon coating to eliminate cracking when exposed to harsh conditions and keeps water, oils, and dust away from the contact blocks.

Internal Self-Lubricant

- All frictional parts are molded with an internal self-lubricant to provide outstanding wear without troublesome greases used by others.

One Cam Design

- Our single cam design eliminates the need for multiple cam and selector switch configurations, reducing inventory and saves you labor time and costs.

Rubber Boots

- Our state-of-the-art rubber boots protect both the operators and the circuits behind them from harsh chemicals and climates. They feature a built-in clamp ring that is molded with Neoprene and has been modified to provide added pliability and protection against dust, freezing and thawing environments.

c3controls®

Copyright © 2022 c3controls. All Rights Reserved.

724.775.7926 | c3controls.com

REVISION 07. 2026

22MM NEMA **PILOT DEVICES**

SPECIFICATIONS

ELECTRICAL RATINGS

Lamp	Industry Number	Rated Volts	Lumens (MSCD)	Design Life (Hrs.)	Current Draw (mA)	Lamp Type	Shock & Vibration	Leakage Protection
LED12	**	12V †	Varies w/Color 2000 mcd Typical	100,000	< 20	LED	Excellent	4 mA
LED24	**	24V †			< 20			4 mA
LED130	**	130V †			< 10			2 mA

** Designates a lamp design optimized for c3controls Illuminated Devices.

† LED voltage tolerance is +/- 10%

DIELECTRIC STRENGTH (MECHANICAL CONTACTS) 2200V for 1 Minute

STANDARD CONTACTS

	Utilization Category				
	IEC	UL	Make Rating	Break Rating	Ith Thermal Current
AC	AC-15	A600	7200VA	720VA	10A
DC	DC-13	P300	138VA	138VA	5A

NOTE: For AC voltages below 72VAC the max. allowed switching current is 10A=Ith.
For DC voltages below 28VDC the max. allowed switching current is 5A=Ith.

ENVIRONMENTAL RATINGS

	Type 1, 2, 3, 3R, 4/4X, 12, 13, and IP65
Operating Temperature	-40° F to +131° F (-40° C to +55° C)
Storage Temperature	-40° F to +185° F (-40° C to +85° C)

TERMINAL & WIRING CONSIDERATION

Wire: AWG 22 -12 CU	(Copper only - Solid & Stranded) [.5 ~ 4mm²] One or two wires permitted per termination.
Recommended Torque	7-10 lb-in [.8 Nm]

ROHS COMPLIANCE

For RoHS compliance documentation by product, refer to www.c3controls.com.

For complete ratings and detailed specifications refer to www.c3controls.com.

DIMENSIONS

Momentary Non-Illuminated Operator (shown with Flush Cap)

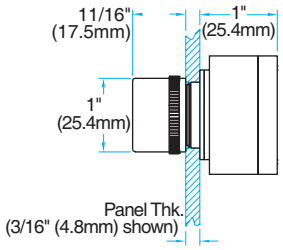

2-Position Push-Pull Maintained Non-Illuminated Operator (shown with 1-1/2" [38mm] Mushroom Cap)

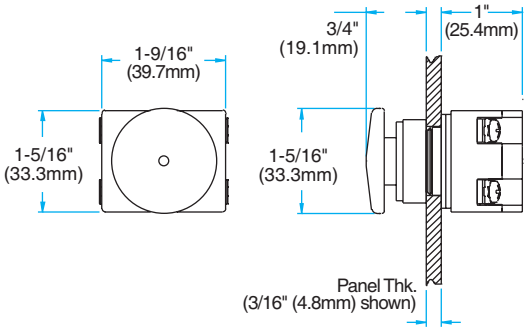

Full Voltage Pilot Light Operator

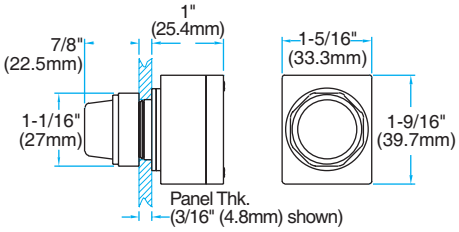

Selector Switch Operator (shown with Standard Handle)

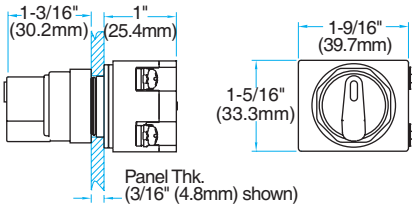

CERTIFICATIONS

Conformity to Standards:

UL 508
CSA C22.2 No. 14
IEC 60947-1, 60947-5-1

Certifications:

UL File #: E68568 (Guide NKCR, NKCR7)
CSA File #: LR47446-1
CE Marked (per EU Low Voltage Directive 2006/95/EC and RoHS Directive 2011/65/EU)

Visit www.c3controls.com to download product certifications.

c3controls

Copyright © 2022 c3controls. All Rights Reserved.

724.775.7926 | www.c3controls.com

REVISION 01. 2021