DEFINITE PURPOSE CONTACTORS

series 280 non-reversing

series 290 reversing

c3controls Series 280 and Series 290 Definite Purpose Contactors are designed to meet your power switching application, right down to the number of power poles. Commonly used in the HVAC industry, definite purpose contactors can help you save money and premium panel space. Just look and see what our new line has to offer!

Section 29

Series 280 Non-Reversing Contactors	4
Series 290 Reversing Contactors	5
Specifications	7
Circuit Diagrams	10
Dimensions	11

PROVEN

Conformity to Standards:
UL 508
CSA C22.2 No. 14-10

Certifications:
UL File #: E236197 (Guide NLDX2, NLDX8)

Visit www.c3controls.com to download product certifications.

NOTE: The scope (range, description, price, specifications, dimensions, etc.) of the product featured in this section is subject to change without notice. Refer to www.c3controls.com for product updates.

DEFINITE PURPOSE CONTACTORS

c3controls offers a comprehensive line of Definite Purpose Contactors designed and manufactured to meet the needs of the machine builder. We promise durable products at a price that gives you an edge. Check out all the features of our Series 280/290 Definite Purpose Contactors below!

DELIVERING SUPERIOR PRODUCT QUALITY AND MANUFACTURING EXCELLENCE

✓ **Proven**	Our Series 280 and 290 Definite Purpose Contactors are UL Recognized, meeting essential standards requirements.
✓ **Compact Size**	Reduced panel area for lower installed costs. Maximum three (3) frame sizes per pole for devices rated from 20A to 90A.
✓ **Lower Cost**	Definite purpose contactors are a lower cost alternative when compared to 3-pole standard contactors.
✓ **Flexibility**	Available in multiple pole configurations, up to 3 to meet your application needs.
✓ **Easy to Install**	Panel-mountable with four screws, one in each corner, for fast and simple installation.
✓ **Visible Certifications**	Our product certifications and electrical ratings are clearly marked on the outside of the device for easy reference during installation.
✓ **Added Safety**	The durable, impact-resistant Class F-type contactor frame is insulated to guard against physical or electrical damage.
✓ **36-Month Warranty***	Every product is backed by our 36-Month Warranty—giving you confidence in the quality, reliability, and performance of components designed for the most demanding applications.
✓ **Guaranteed Availability***	Any order for standard catalog items received by 6:00pm ET is guaranteed to ship same-day. NOTE: Not all items are available for guaranteed same-day shipping, consult factory for the details.
✓ **Advantage Pricing**	Our approach to product development, manufacturing, and focus on servicing the OEM and Electrical Equipment Builder reduces cost. The result—the best value in the industry.

*See c3controls Terms & Conditions

1-Pole

2-Pole

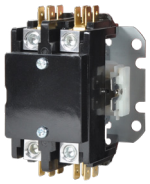

3-Pole

3-Pole Dual Frame

UNIQUE PRODUCT LINE FEATURES

MULTIPLE POLE CONFIGURATIONS

With 1-, 2-, and 3-pole configurations available, a more accurate contactor can now be chosen, leading to cost savings and a smaller dimensional footprint compared to a 3-pole only contactor.

SINGLE POLE CONTACTOR WITH SHUNT

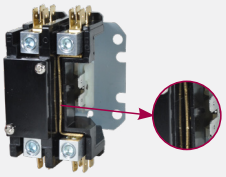

Single pole contactors include a shunt for termination and feed-through of Neutral line.

ADDED SAFETY

The durable, impact-resistant Class F-type contactor frame is insulated to guard against physical and electrical damage.

INTEGRATED MECHANICAL INTERLOCK

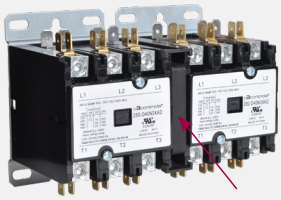

Series 290 Reversing Contactors include an Integrated Mechanical Interlock to avoid simultaneous switching of both the frames.

EASE OF CONNECTION

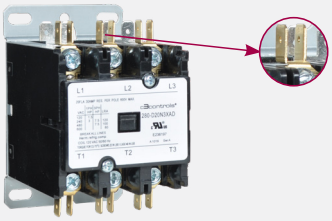

Quick connect and box lug wire terminals will help reduce your installation costs and enhance the features and performance of your equipment.

QUICK IDENTIFICATION

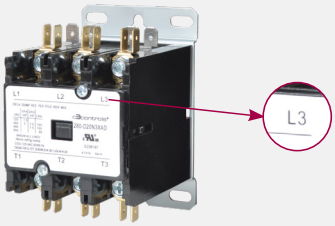

Clear markings and visible labels ensure quick identification of the product, simplifying troubleshooting in panels with many devices.

FIND IT FAST

Definite Purpose Contactors

- Certifications
- Specifications
- Dimension Drawings
- Installation Instructions
- Easy to Buy

www.c3controls.com

IT'S EASY TO BUILD YOUR OWN DEFINITE PURPOSE CONTACTOR

Simply pick the code number from each of the sections below and combine them to build your part number.

Definite Purpose Contactors (Non-Reversing)

I II

Example: To build one of our most popular Definite Purpose Contactors, the part number would be I + II or 280-D50N3XAD

I. NUMBER OF POLES

CODE	DESCRIPTION	LIST
	1 POLE NON-REVERSING	
280-D20N1N	20A Contactor	$ 29.10
280-D25N1N	25A Contactor	$ 32.50
280-D30N1N	30A Contactor	$ 41.40
280-D40N1N	40A Contactor	$ 54.90
	2 POLE NON-REVERSING	
280-D20N2	20A Contactor	$ 35.80
280-D25N2	25A Contactor	$ 39.20
280-D30N2	30A Contactor	$ 49.30
280-D40N2	40A Contactor	$ 66.10
280-D50N2	50A Contactor	$116.50
280-D60N2	60A Contactor	$153.90
280-D75N2	75A Contactor	$280.80
280-D90N2	90A Contactor	$313.20
	3 POLE NON-REVERSING	
280-D20N3	20A Contactor	$ 47.00
280-D25N3	25A Contactor	$ 52.40
280-D30N3	30A Contactor	$ 66.30
280-D40N3	40A Contactor	$ 87.80
280-D50N3	50A Contactor	$154.60
280-D60N3	60A Contactor	$205.70
280-D75N3	75A Contactor	$331.60
280-D90N3	90A Contactor	$417.70

II. COIL VOLTAGE

CODE	DESCRIPTION
XC	24V AC (50/60Hz)
XAD	120V AC (50/60Hz)
XE	208-240V AC (50/60Hz)
P	277V AC (50/60Hz)

NOTE: Not all items are available for guaranteed same-day shipping, consult factory for the details.

All Sales of Series 280/290 are Final, No Returns.

DISCOUNT SCHEDULE F

Some of Our Popular Configurations:

DEFINITE PURPOSE CONTACTORS (NON-REVERSING)		
CATALOG NUMBER	**DESCRIPTION**	**LIST**
280-D30N2XAD	Non-Reversing, 30A, 2 Pole, 120V AC Coil	$ 49.30
280-D50N3XAD	Non-Reversing, 50A, 3 Pole, 120V AC Coil	$154.60
280-D60N3XAD	Non-Reversing, 60A, 3 Pole, 120V AC Coil	$205.70

Available Frame Sizes for Non-Reversing Contactors

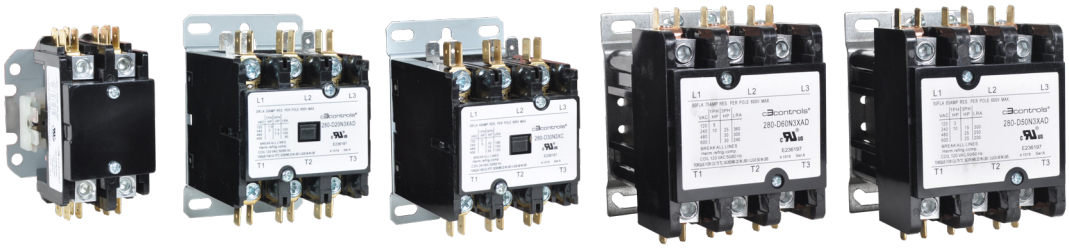

IT'S EASY TO BUILD YOUR OWN DEFINITE PURPOSE CONTACTOR

Simply pick the code number from each of the sections below and combine them to build your part number.

Definite Purpose Contactors (Reversing)

I II

Example: To build one of our most popular Definite Purpose Contactors, the part number would be I + II or 290-D40N33XAD

I. NUMBER OF POLES

CODE	DESCRIPTION	LIST
290-D20N33	3 + 3 Pole, Dual Frame, 20A Contactor	$154.60
290-D25N33	3 + 3 Pole, Dual Frame, 25A Contactor	$182.60
290-D30N33	3 + 3 Pole, Dual Frame, 30A Contactor	$212.80
290-D40N33	3 + 3 Pole, Dual Frame, 40A Contactor	$252.00

II. COIL VOLTAGE

CODE	DESCRIPTION
XC	24V AC (50/60Hz)
XAD	120V AC (50/60Hz)
XE	208-240V AC (50/60Hz)
P	277V AC (50/60Hz)

NOTE: Series 290 Reversing Contactors are available upon special request and are not available for same-day shipping. Consult factory for details.

DISCOUNT SCHEDULE F

All Sales of Series 280/290 are Final, No Returns.

Some of Our Popular Configurations:

DEFINITE PURPOSE CONTACTORS (REVERSING)

CATALOG NUMBER	DESCRIPTION	LIST
290-D40N33XAD	Reversing, 40A, 3+3 Pole, 120V AC Coil	$252.00
290-D30N33XAD	Reversing, 30A, 3+3 Pole, 120V AC Coil	$212.80
290-D20N33XAD	Reversing, 20A, 3+3 Pole, 120V AC Coil	$154.60

Non-Reversing and Reversing Contactors

c3controls Series 280 and Series 290 Definite Purpose Contactors are designed to meet your power switching application, right down to the number of power poles. Commonly used in the HVAC industry, definite purpose contactors can help you save money and panel space. Quick connect and box lug wire terminals help reduce your installation costs and enhance the features and performance of your equipment. See what else the Series 280 & 290 have to offer.

Product features include:

- Compact size – Three (3) frame sizes per pole for devices rated from 20A to 90A.
- Recognizable, sleek family appearance across all three poles.
- Standard range of AC operating coils for control circuit applications: 24V, 120V, 208-240V, and 277V.
- Single pole contactors include a shunt for termination and feed-through of Neutral line.
- 20A to 40A 3 Pole (Series 290) devices available in Dual frame for reversing applications.
- Series 290 devices include an Integrated Mechanical Interlock to avoid simultaneous switching of both frames.
- Panel-mountable with four screws for fast and simple installation.
- The durable, impact-resistant, Class F-type contactor frame is insulated to guard against physical and electrical damage.
- Markings and labels are highly visible for ease of troubleshooting and maintenance.

UNIQUE PRODUCT FEATURES

Multiple Pole Configurations

With 1-, 2-, and 3-pole configurations available, a more accurate contactor can now be chosen, leading to cost savings and a smaller dimensional footprint compared to a 3-pole only contactor.

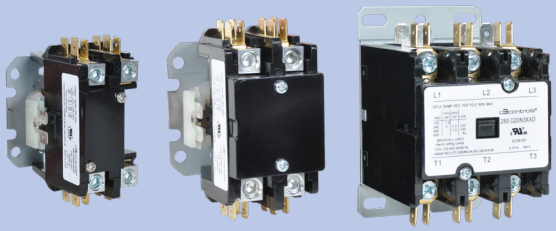

		D20N1N	D25N1N	D30N1N	D40N1N	D20N2	D25N2	D30N2	D40N2
KEY SPECIFICATIONS									
	UNITS								
No. of Power Poles		1.5				2			
Full Load Amps (FLA)									
240/277V AC	A	20	25	30	40	20	25	30	40
480V AC	A	20	25	30	40	20	25	30	40
600V AC	A	20	25	30	40	20	25	30	40
Resistive Load Amps	A	30	35	40	50	30	35	40	50
Locked Rotor Amps									
240/277V AC	A	120	150	180	240	120	150	180	240
480V AC	A	100	125	150	200	100	125	150	200
600V AC	A	80	100	120	160	80	100	120	160
Power Pole Wire Terminals (for all line and load terminals)		Phillips/Slotted/Socket Screw			Box Lug with Hex Drive Box Lug Screws	Phillips/Slotted/Socket Screw			Box Lug with Hex Drive Box Lug Screws
Quick Connects per Terminal									
Coil Terminals (+/-)	Blades	2/2							
Power Poles	Blades	4							

		D50N2	D60N2	D75N2	D90N2	D20N3	D25N3	D30N3	D40N3
KEY SPECIFICATIONS									
	UNITS								
No. of Power Poles		2				3*			
Full Load Amps (FLA)									
240/277V AC	A	50	60	75	90	20	25	30	40
480V AC	A	50	60	75	90	20	25	30	40
600V AC	A	50	60	75	90	20	25	30	40
Resistive Load Amps	A	65	75	90	120	30	35	40	50
Locked Rotor Amps									
240/277V AC	A	300	360	450	540	120	150	180	240
480V AC	A	250	300	375	450	100	125	150	200
600V AC	A	200	240	300	360	80	100	120	160
Power Pole Wire Terminals (for all line and load terminals)		Box Lug with Hex Drive Box Lug Screws		Box Lug with Slotted Drive Box Lug Screws		Phillips/Slotted/Socket Screw			Box Lug with Hex Drive Box Lug Screws
Quick Connects per Terminal									
Coil Terminals (+/-)	Blades	2/2							
Power Poles	Blades	2							

*3+3 Poles for Series 290 Reversing Contactors

		D50N3	D60N3	D75N3	D90N3
KEY SPECIFICATIONS					
	UNITS				
No. of Power Poles		3			
Full Load Amps (FLA)					
240/277V AC	A	50	60	75	90
480V AC	A	50	60	75	90
600V AC	A	50	60	75	90
Resistive Load Amps	A	65	75	90	120
Locked Rotor Amps					
240/277V AC	A	300	360	450	540
480V AC	A	250	300	375	450
600V AC	A	200	240	300	360
Power Pole Wire Terminals (for all line and load terminals)		Box Lug with Hex Drive Box Lug Screws		Box Lug with Slotted Drive Box Lug Screws	
Quick Connects per Terminal					
Coil Terminals (+/-)	Blades	2/2			
Power Poles	Blades	2			

1 & 2-POLES, UP TO 40 FLA

		1-POLE CONTACTORS				2-POLE CONTACTORS			
COIL CHARACTERISTICS									
	UNITS								
Nominal Coil Voltage	V	24	120	208/240	277	24	120	208/240	277
Maximum Pickup Voltage	V	18	88	177	221	18	88	177	221
Drop-Out Voltage Range	V	6~15	20~70	40~140	50~165	6~15	20~70	40~140	50~165
NOMINAL INRUSH									
VA @ 50Hz		31	31	35	31	22	22	22	22
VA @ 60Hz		28	28	32	28	20	20	20	20
NOMINAL SEALED									
VA @ 50Hz		6	6	7	6	5.5	5.5	5.5	5.5
VA @ 60Hz		5	5	6	5	4.5	4.5	4.5	4.5
Nominal Resistance	Ohms	18	420	1800	2500	11	237	1000	1600
Maximum Coil Voltage	V	30	132	264	300	30	132	264	300
OTHER CHARACTERISTICS		**20-30 FLA**				**40 FLA**			
Line & Load Terminals		#10-32 Screw				Box Lug			
Wire Size (Min.-Max.)	AWG	16-8*				14-4 Cu/Al			
Tightening Torque (Recommended)	Lb-in.	25				40			
Insulation System	°C	130 (Class B)							
Permissable Ambient Temperature	°C	-40 to 65							
Altitude	m	2000							
Ingress Protection	IP	20							
ROHS COMPLIANCE		For RoHS compliance documentation by product, refer to www.c3controls.com							
*Stranding must be split for #8 wire									

3-POLES, UP TO 40 FLA

COIL CHARACTERISTICS					
	UNITS				
Nominal Coil Voltage	V	24	120	208/240	277
Maximum Pickup Voltage	V	18	88	177	220
Drop-Out Voltage Range	V	6~15	20~70	40~140	65~185
NOMINAL INRUSH					
VA @ 50Hz		65	65	65	65
VA @ 60Hz		60	60	60	60
NOMINAL SEALED					
VA @ 50Hz		7.5	7.5	7.5	7.5
VA @ 60Hz		6	6	6	6
Nominal Resistance	Ohms	7	180	720	900
Maximum Coil Voltage	V	30	132	264	300
OTHER CHARACTERISTICS		**20-30 FLA**		**40 FLA**	
Line & Load Terminals		#10-32 Screw		Box Lug	
Wire Size (Min.-Max.)	AWG	16-8*		14-4 Cu/Al	
Tightening Torque (Recommended)	Lb-in.	25		40	
Insulation System	°C	130 (Class B)			
Permissable Ambient Temperature	°C	-40 to 65			
Altitude	m	2000			
Ingress Protection	IP	20			
ROHS COMPLIANCE		For RoHS compliance documentation by product, refer to www.c3controls.com			
*Stranding must be split for #8 wire					

2 & 3-POLES, UP TO 60 FLA					
COIL CHARACTERISTICS					
	UNITS				
Nominal Coil Voltage	V	24	120	208/240	277
Maximum Pickup Voltage	V	18	93	177	235
Drop-Out Voltage Range	V	6~15	20~70	40~135	50~180
NOMINAL INRUSH					
VA @ 50Hz		140	140	140	140
VA @ 60Hz		132	132	132	132
NOMINAL SEALED					
VA @ 50Hz		20	20	20	20
VA @ 60Hz		14	14	14	14
Nominal Resistance	Ohms	2.3	53	180	280
Maximum Coil Voltage	V	30	132	264	300
OTHER CHARACTERISTICS		**50 FLA & 60 FLA**			
Line & Load Terminals		Box Lug			
Wire Size (Min.-Max.)	AWG	14-2 Cu/Al			
Tightening Torque (Recommended)	Lb-in.	50			
Insulation System	°C	130 (Class B)			
Permissable Ambient Temperature	°C	-40 to 65			
Altitude	m	2000			
Ingress Protection	IP	20			
ROHS COMPLIANCE		For RoHS compliance documentation by product, refer to www.c3controls.com			

2 & 3-POLES, UP TO 90 FLA					
COIL CHARACTERISTICS					
	UNITS				
Nominal Coil Voltage	V	24	120	208/240	277
Maximum Pickup Voltage	V	18	88	177	220
Drop-Out Voltage Range	V	6~15	20~70	40~110	65~185
NOMINAL INRUSH					
VA @ 50Hz		285	285	285	285
VA @ 60Hz		240	240	240	240
NOMINAL SEALED					
VA @ 50Hz		42	42	42	42
VA @ 60Hz		27	27	27	27
Nominal Resistance	Ohms	0.85	15.6	63.5	85
Maximum Coil Voltage	V	30	132	264	300
OTHER CHARACTERISTICS		**75 FLA & 90 FLA**			
Line & Load Terminals		Box Lug			
Wire Size (Min.-Max.)	AWG	14-1 Cu/Al			
Tightening Torque (Recommended)	Lb-in.	50			
Insulation System	°C	130 (Class B)			
Permissable Ambient Temperature	°C	-40 to 65			
Altitude	m	2000			
Ingress Protection	IP	20			
ROHS COMPLIANCE		For RoHS compliance documentation by product, refer to www.c3controls.com			

CIRCUIT DIAGRAMS

1-Pole

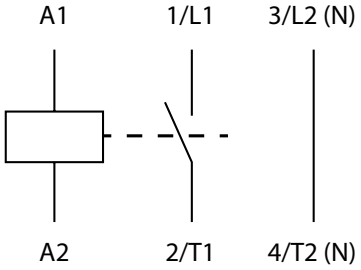

2-Poles

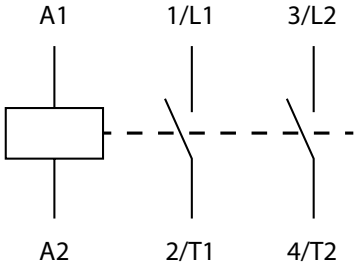

3-Poles

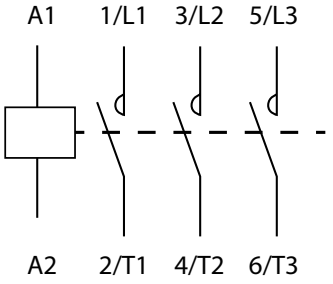

Series 290

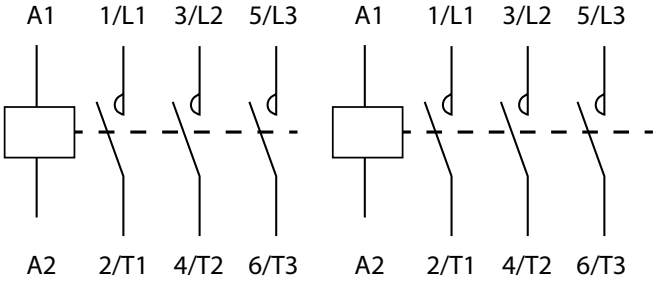

1 POLE NON-REVERSING DEFINITE PURPOSE CONTACTORS

280-D20N1N,280-D25N1N & 280-D30N1N (20A - 30A)

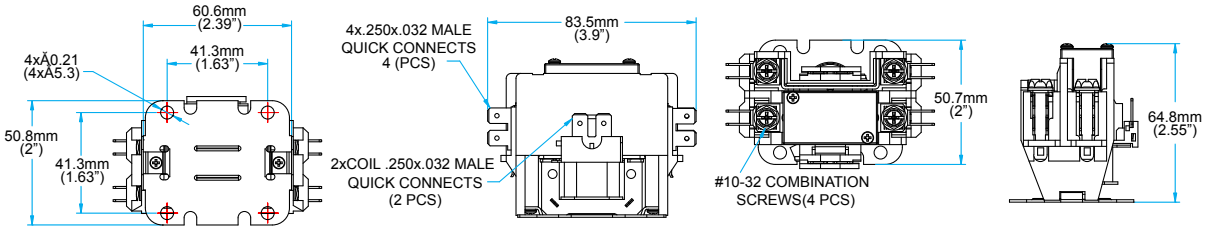

280-D40N1N (40A)

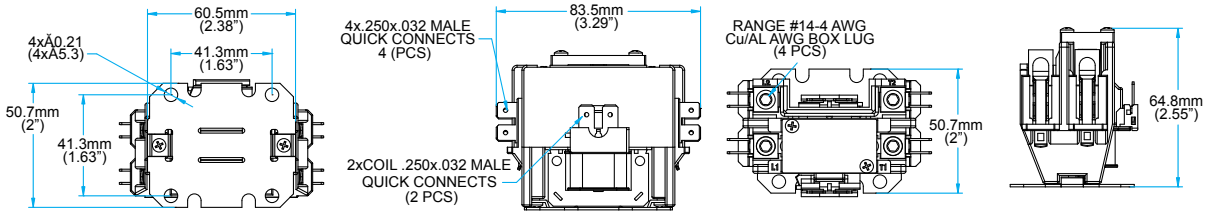

2 POLE NON-REVERSING DEFINITE PURPOSE CONTACTORS

280-D20N2, 280-D25N2 & 280-D30N2 (20A - 30A)

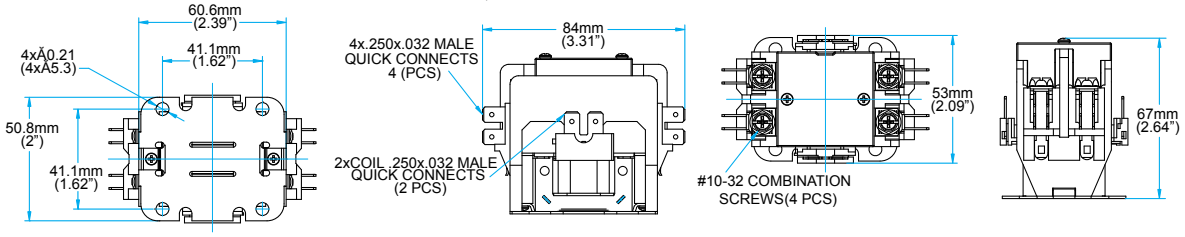

280-D40N2 (40A)

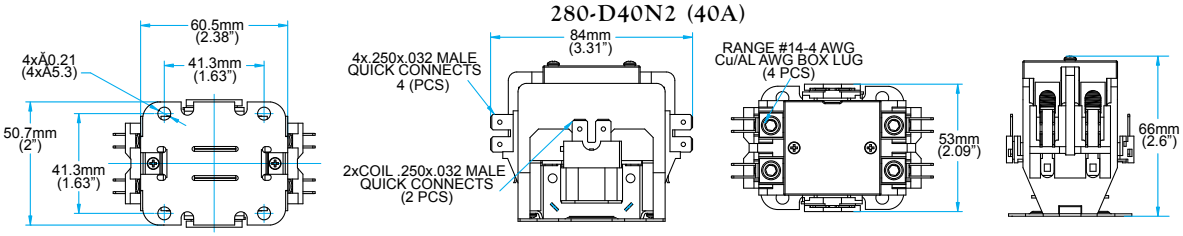

280-D50N2 & 280-D60N2 (50A - 60A)

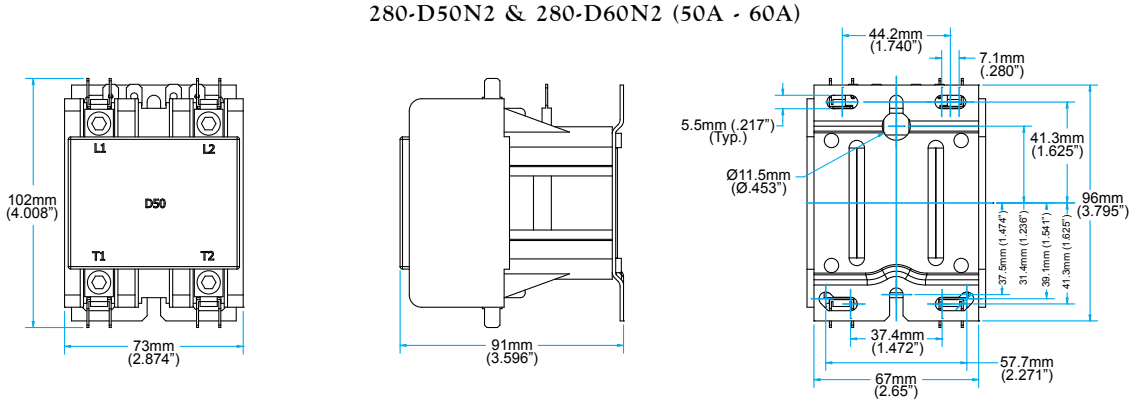

280-D75N2 & 280-D90N2 (75A - 90A)

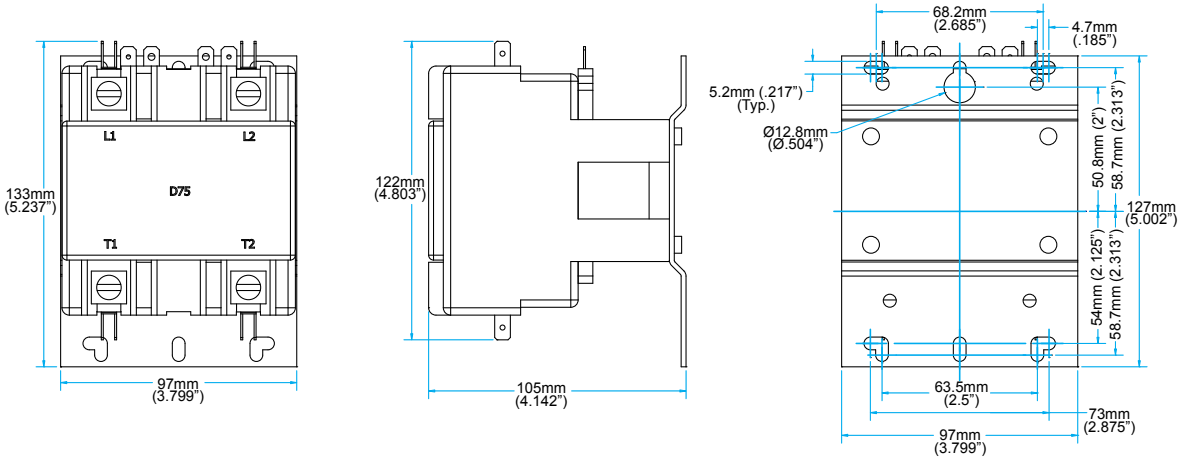

3 POLE NON-REVERSING DEFINITE PURPOSE CONTACTORS

280-D20N3, 280-D25N3 & 280-D30N3 (20A - 30A)

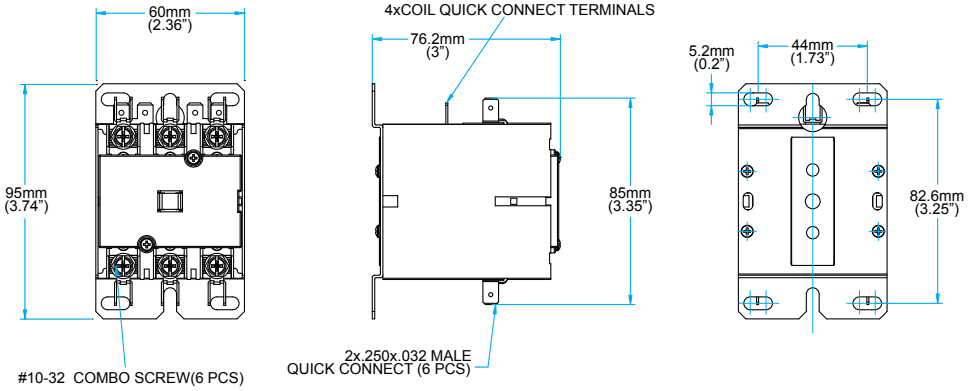

280-D40N3 (40A)

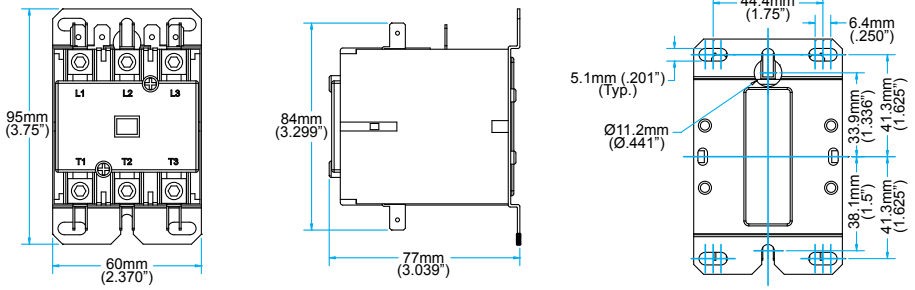

280-D50N3 & 280-D60N3 (50A - 60A)

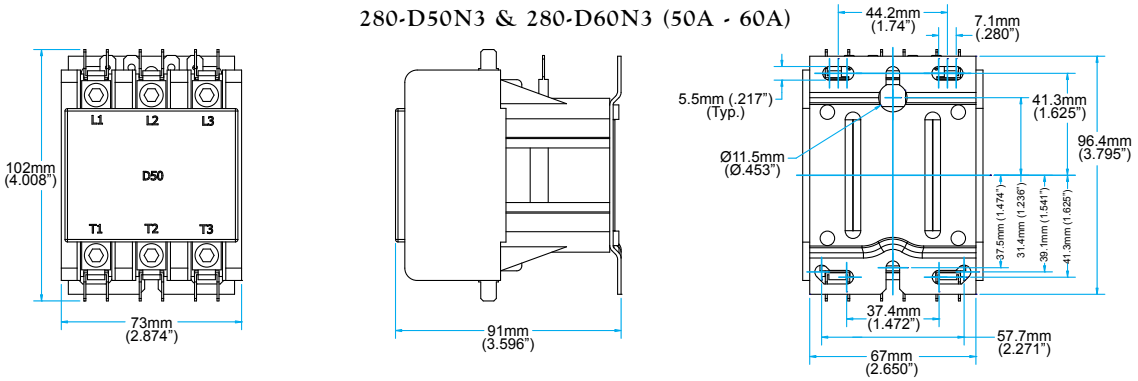

280-D75N3 & 280-D90N3 (75A - 90A)

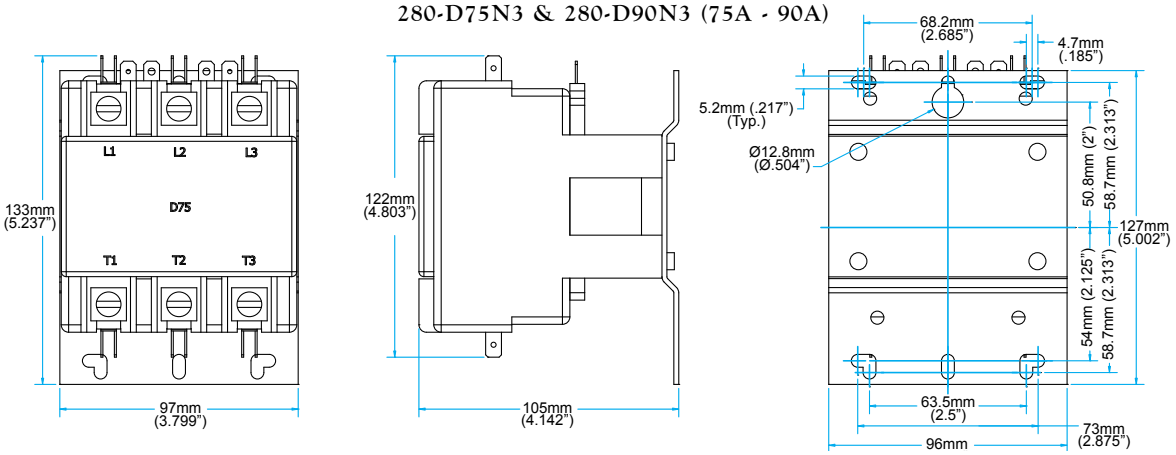

3 POLE REVERSING DEFINITE PURPOSE CONTACTORS

290-D20N33, 290-D25N33 & 290-D30N33 (20A - 30A)

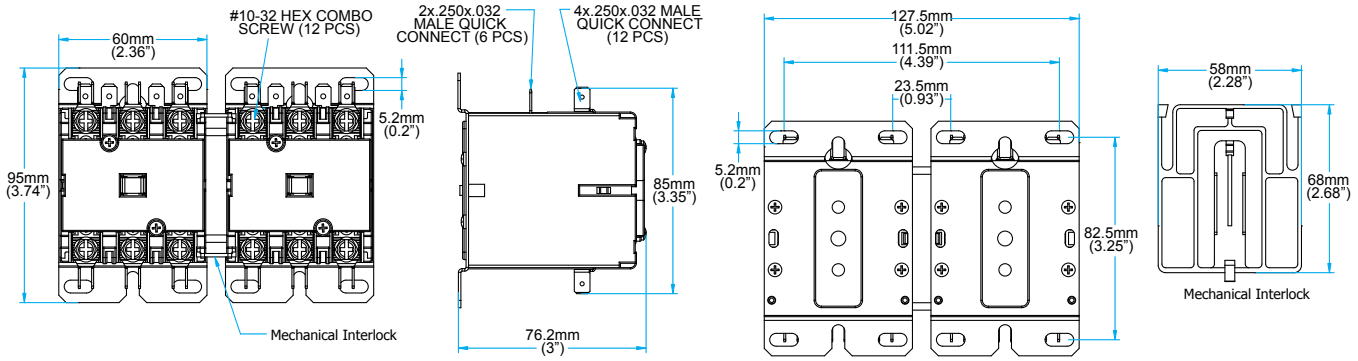
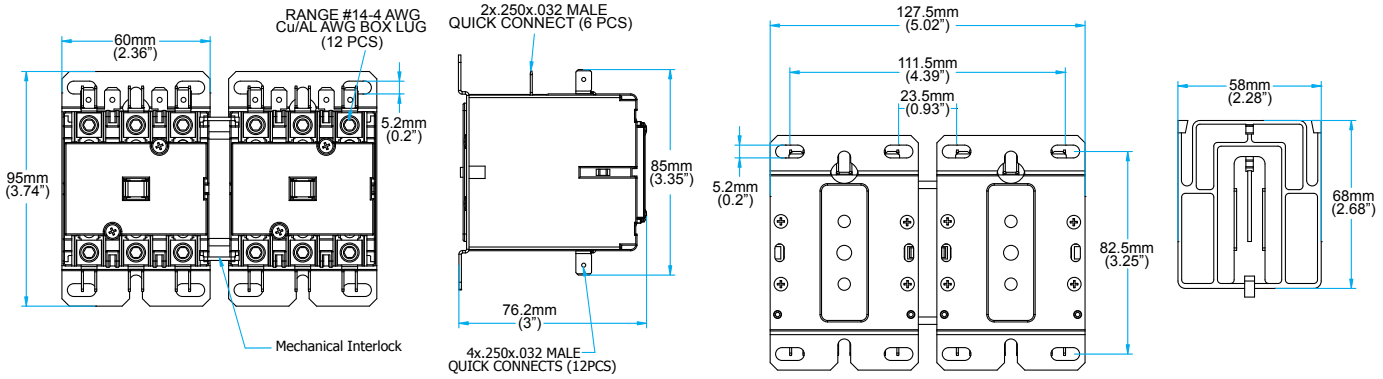
290-D40N33 (40A)