16MM PILOT LIGHTS

When you need a space-saving pilot light with plenty of special features and flexibility, look to c3controls. Our 16mm pilot lights feature Lexan™ lenses in a variety of colors, and are built to handle even the harshest of environments. Our 100,000-hour LED lamps with leakage protection provide bright light output with superior visibility. And we've increased the range of our Multi-Voltage LED light unit to operate at any voltage from 20V to 277V AC or DC!

Section 19

Indicating Lights	4
Multi-Voltage Pilot Lights	6
Legend Plates	8
Accessories	10
Specifications	11
Dimensions	12

PROVEN

Conformity to Standards:

INDICATING LIGHTS

UL 508

CSA C22.2 No. 14

IEC 60947-1, 60947-5-1

MULTI-VOLTAGE PILOT LIGHTS

UL 508

IEC 60947-1, 60947-5-1

Certifications:

UL File #: E68568 (Guide NKCR, NKCR7)

CSA File #: 47446-9

CE Marked (per EU Low Voltage Directive 2006/95/EC and RoHS Directive 2011/65/EU)

UL File #: E68568 (Guide NKCR, NKCR7)

CE Marked (per EU Low Voltage Directive 2006/95/EC and RoHS Directive 2011/65/EU)

Visit c3controls.com to download product certifications.

NOTE: The scope (range, description, price, specifications, dimensions, etc.) of the product featured in this section is subject to change without notice. Refer to c3controls.com for product updates.

16MM PILOT LIGHTS

Within our extensive product portfolio is our line of 16mm Pilot Lights, just one example of our superior product quality. Each product is designed and manufactured to meet the needs of the machine builder. Check out all the features of our Series 16 below!

COMPACT LIGHTS SAVE YOU VALUABLE SPACE WHERE YOU NEED IT MOST

✓ **Proven**	Our 16mm operators are UL Listed, CSA Certified and CE marked meeting global standards requirements.
✓ **Quick and Simple**	Front panel mounting for simple installation and lamp replacement.
✓ **Environmentally Secure**	With 4/4X and IP65 ratings, our 16mm line of pilot lights are built to last and withstand dust, corrosion, ice, and rain.
✓ **Long Lasting**	Our reflection technology and state-of-the-art LED lamps improve visibility from all angles, and c3controls LED lamps last 100,000 hours—that's 11.4 years!
✓ **Light Units Run Cool**	With premium engineered thermoplastics the light units run cool while providing extreme light intensity versus competitor units that run hot and produce high heat.
✓ **Heavy Duty**	Polyester construction provides superior durability, corrosion resistance, moisture rejection and electrical insulation, and encases the resistors to keep heat away from the wires.
✓ **Simple Customization**	Various lens color options are available for appropriate operator interface.
✓ **Visible Certifications**	Our product certifications and electrical ratings are clearly marked on the outside of the operator for easy reference during installation.
✓ **Enhanced Safety**	Our field-installable IP20 terminal guards are transparent to maintain terminal visibility and they snap securely in place without the use of tools.
✓ **Stability**	All 16mm lights use a miniature bayonet base to provide reliable security for the lamps.
✓ **36-Month Warranty***	Every product is backed by our 36-Month Warranty—giving you confidence in the quality, reliability, and performance of components designed for the most demanding applications.
✓ **Guaranteed Same-Day Shipping***	Product availability reduces inventory, and improves cash-flow—saving you money. With c3controls any order for standard catalog items received by 6:00pm ET is guaranteed to ship same-day.
✓ **Advantage Pricing**	Our approach to product development, manufacturing, and focus on servicing the OEM and Electrical Equipment Builder reduces cost. The result—the best value in the industry.

*See c3controls Terms & Conditions

> *By utilizing a c3controls pilot light that works in 20V-277V AC and DC terminals, we're able to streamline our inventory requirements because we only need one product for any application.*
>
> Mike Hughes, President • **Packaged Refrigeration Systems**

Full Voltage Indicating Pilot Light

Indicating Pilot Light

Multi-Voltage Pilot Light

UNIQUE PRODUCT LINE FEATURES

EXCLUSIVE MULTI-VOLTAGE LIGHTS

c3controls state-of-the-art multi-voltage light modules—the only U.S. engineered multi-voltage light in the industry!—operate at any voltage from 20V to 277V AC or DC without losing intensity.

WIDE RANGE OF APPLICATIONS

Multiple light designs in full voltage, resistor, and multi-voltage to cover a broad variety of applications up to 600V.

QUALITY MATERIALS

c3controls selects the highest quality raw materials to ensure our products outlast the competition, including Lexan™ plastic for our lenses—improving visibility and resistance to high impact for reliable performance, even in high ambient temperatures.

FIND IT FAST

16mm Pilot Lights

- Certifications
- Specifications
- Dimension Drawings
- Installation Instructions
- Easy to Buy

c3controls.com

IT'S EASY TO BUILD YOUR OWN PILOT LIGHT

Simply pick the code number from each of the sections below and combine them to build your part number.

Indicating Lights

_____ _____ – MPLL _____ – _____
I II III IV V

Example: To build one of our most popular Pilot Lights, the part number would be I + II + MPLL + IV + V or MFVL120LG-MPLLGN

I. LIGHT MODULE TYPE & VOLTAGE

CODE	DESCRIPTION	LIST
FULL VOLTAGE (SHORT CASE)		
MFVL12	12V AC/DC	$46.00
MFVL24	24V AC/DC	$46.00
MFVL120	120V AC/DC	$46.00
RESISTOR (CASE SIZE VARIES)		
MRL120*	120V AC/DC	$50.00
MRL125D*	125V AC/DC	$50.00
MRL140	140V DC	$50.00
MRL240	240V AC/DC	$50.00

*NOTE: MRL120 & MRL125D have grey housings.

II. LED LAMP COLOR

CODE	COLOR	LIST
LA	Amber	$18.00
LB	Blue	$18.00
LG	Green	$18.00
LR	Red	$18.00
LW	White	$18.00
NL	**No Lamp**	– $ 1.80

III. LENS TYPE

CODE	DESCRIPTION	LIST
MPLL	Miniature Pilot Light Lens	$ 6.00

IV. LENS COLOR

CODE	COLOR
AR	Amber
BE	Blue
CR	Clear
GN	Green
RD	Red
WE	White

V. OPTIONS

CODE	DESCRIPTION	LIST
(Blank)	None	—
IP20	IP20 Guard	$ 4.00

SEE PAGE 10 FOR LAMP REPLACEMENT CHART AND PAGE 11 FOR LAMP TECHNICAL DATA.

DISCOUNT SCHEDULE E

AVAILABLE LENS COLORS FOR INDICATING PILOT LIGHTS

16mm Indicating Lights

Our 16mm Indicating Lights feature polyester construction for superior corrosion resistance, moisture rejection and electrical insulation. All units are supplied with #6 terminal screws with self-lifting captive wire clamps to accommodate #22 through two #12 AWG wires (0.5 - 4mm^2) per terminal. Nickel plated clamp rings are ideal for corrosive environments. All units mount in a round 5/8" (16mm) hole and are directly interchangeable with competitor units. Units are available in different case depths for easy installation in your control panel – whatever the dimensions. All c3controls 16mm operators are UL Listed and are rated Type 4/4X as standard for watertight and corrosion resistance. In addition, light units are also listed for Type 1, 2, 3, 3R, 12, 13 and IP65.

Product features include:

- All lights use miniature bayonet base lamps to provide reliable lamp secureness.

UNIQUE PRODUCT FEATURES

1. Thin, compact, insulating polyester housing provides added protection for those tight fitting spaces.
2. Premium engineered thermoplastics keep the light units running cool while providing extreme light intensity versus competitor units that run hot and produce high heat.
3. Heavy-duty brass current carrying components for improved conductivity and corrosion resistance.
4. High-tech LED lamps offer the latest and most current technology providing leakage protection, great light output and increased visibility for side views – *and lasts up to 100,000 hours!*
5. Front of panel lamp change without removing device from panel.
6. Our rugged Lexan™ lenses can resist high impact for reliable performance in most environments – even in high ambient temperatures.
7. Enhanced safety with field installable IP20 terminal guards are transparent to maintain terminal visibility. Their construction provides easy access to the device terminals – making wiring fast and convenient, and they snap securely in place without the use of tools.

Some of Our Popular Configurations:

16MM INDICATING LIGHTS

PART NUMBER	DESCRIPTION	LIST
MRL120LR-MPLLRD	120V Resistor w/Red LED and Red Lens	$74.00
MRL120LA-MPLLAR	120V Resistor w/Amber LED and Amber Lens	$74.00
MFVL120LG-MPLLGN	120V Full Voltage w/Green LED and Green Lens	$70.00

IT'S EASY TO BUILD YOUR OWN PILOT LIGHT

Simply pick the code number from each of the sections below and combine them to build your part number.

20-277V Multi-Voltage Pilot Lights

_____ _____ _____ – MPLL _____ – _____

I II III IV V VI

Example: To build one of our most popular Pilot Lights, the part number would be I + II + III + MPLL + V + VI or 16MV20-277DLW-MPLLGN

I. OPERATOR TYPE

CODE	DESCRIPTION	LIST
16MV20-277	Non-Relampable Multi-Voltage Pilot Light	$76.00

II. LED LAMP FUNCTION

CODE	DESCRIPTION
D	Standard

III. LED LAMP COLOR

CODE	DESCRIPTION	LIST
LW	White	—

IV. LENS TYPE

CODE	DESCRIPTION	LIST
MPLL	Miniature Pilot Light Lens	$ 6.00

c3controls LED lamps last 100,000 hours — *that's 11.4 years!*

V. LENS COLOR

CODE	DESCRIPTION
AR	Amber
BE	Blue
CR	Clear
GN	Green
RD	Red
WE	White

VI. OPTIONS

CODE	DESCRIPTION	LIST
(Blank)	None	—
IP20	IP20 Guard	$ 4.00

DISCOUNT SCHEDULE E

SEE PAGE 10 FOR LAMP REPLACEMENT CHART AND PAGE 11 FOR LAMP TECHNICAL DATA.

Some of Our Popular Configurations:

16MM MULTI-VOLTAGE PILOT LIGHTS

PART NUMBER	DESCRIPTION	LIST
16MV20-277DLW-MPLLAR	Multi-Voltage 20-277V, Non-Relampable w/ White LED and Amber Lens	$82.00
16MV20-277DLW-MPLLGN	Multi-Voltage 20-277V, Non-Relampable w/ White LED and Green Lens	$82.00
16MV20-277DLW-MPLLRD	Multi-Voltage 20-277V, Non-Relampable w/ White LED and Red Lens	$82.00

Available Lens Colors For Multi-Voltage Pilot Lights

16mm Multi-Voltage Pilot Lights

Our 16mm Multi-Voltage Pilot Lights feature polyester construction for superior corrosion resistance, moisture rejection and electrical insulation. All units are supplied with #6 terminal screws with self-lifting captive wire clamps to accommodate #22 through two #12 AWG wires (0.5 - 4mm^2) per terminal. Nickel plated clamp rings are ideal for corrosive environments. All units mount in a round 5/8" (16mm) hole and are directly interchangeable with competitor units. The compact size means you can put more into a smaller panel, lowering your cost while boosting the functionality of your machine.

Product features include:

- UL Listed Type 1, 2, 3, 3R, 4/4X, 12, 13 and IP65 ratings for the most demanding applications—including wash-downs and corrosive environments.
- Heavy-duty brass current carrying components for improved conductivity and corrosion resistance.
- Bi-polar design means functionality is independent of which lead is connected to each terminal.
- Rugged Lexan™ lenses resist high impact for reliable perfomance in most environments—even in high ambient temperatures.
- Superior performance even in applications with shock and vibration.
- Enhanced safety with field installable IP20 terminal guards are transparent to maintain terminal visibility. Their construction provides easy access to the device terminals—making wiring fast and convenient, and they snap securely in place without the use of tools.

UNIQUE PRODUCT FEATURES

c3 Exclusive!

Eliminate the Headache of Multiple Lights to Match Multiple Voltages!

Our state-of-the-art, super bright LEDs and printed circuit boards allow you to operate this light at any voltage from 20V to 277V AC or DC without losing light intensity or consuming a lot of power. One light unit covers a lot of applications, reducing your inventory! All you have to do is choose your lens color.

- Wider operating voltage range of 20V-277V AC or DC.
- Depth behind the panel at 1-23/32" (43.6mm).
- Integrated light circuit protection. We included a fusible link in the electronic circuit, resulting in predictable failure mode (open circuit) and improving reliability.
- A redesigned circuit allows you to use the light unit in a wider range of applications, including electronic and coil applications where leakage current and voltages may exist.

IT'S EASY TO BUILD YOUR OWN LEGEND PLATE

Simply pick the code number from each of the sections below and combine them to build your part number.

Legend Plates

_____ _____ – _____ – _____

I *II* *III* *IV*

All legend plates are a 2-ply laminated plastic, laser engraved for a permanent and quality appearance. Uppercase is standard unless specified.

I. LEGEND PLATE TYPE

CODE	DESCRIPTION	LIST
MLLP	Standard 2"h x 2"w	$ 5.80
MLLPH	Horizontal 1"h x 2"w	$ 5.80
MLLPV	Vertical 2"h x 1"w	$ 5.80

Legend plates feature 4 lines of text with approximately 7 characters per line.

II. FACE AND LETTER COLOR

CODE	FACE COLOR	LETTER COLOR
AL	Aluminum	Black
(Blank)	Black	White
BE	Blue	White
GN	Green	White
RD	Red	White
WE	White	Black
YW	Yellow	Black

III. LEGEND DESIGNATION

CODE	DESCRIPTION
00	(BLANK)
01	AUTO
02	CLOSE
26	MOTOR RUN
12	OFF
13	ON
14	OPEN
27	OVERLOAD
15	POWER OFF
16	POWER ON
18	RESET
20	RUN
24	TEST
29	TRIP

IV. ADHESIVE BACK

CODE	DESCRIPTION
(Blank)	No Adhesive Back
A	Adhesive Back

NOT FINDING WHAT YOU NEED IN A STANDARD PLATE?

We offer Special and Custom Engraving up to 12" x 24" (304.8mm x 609.6mm). Consult factory or see page 9 for details.

While our standard legend plates are available for same day shipping, our special and custom legend plates are not.

DISCOUNT SCHEDULE E

IT'S EASY TO BUILD YOUR OWN LEGEND PLATE

Simply pick the code number from each of the sections below and combine them to build your part number.

Special Legend Plates

_____ _____ – SP – _____
I II III IV

All legend plates are a 2-ply laminated plastic, laser engraved for a permanent and quality appearance. Uppercase is standard unless specified.

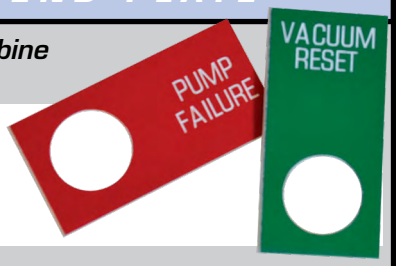

I. LEGEND PLATE TYPE

CODE	DESCRIPTION	LIST
MLLP	Standard 2"h x 2"w	$ 5.80
MLLPH	Horizontal 1"h x 2"w	$ 5.80
MLLPV	Vertical 2"h x 1"w	$ 5.80

Legend plates feature 4 lines of text with approximately 7 characters per line.

II. FACE AND LETTER COLOR

CODE	FACE COLOR	LETTER COLOR
AL	Aluminum	Black
(Blank)	Black	White
BE	Blue	White
GN	Green	White
RD	Red	White
WE	White	Black
YW	Yellow	Black

III. LEGEND DESIGNATION

CODE	DESCRIPTION	LIST
SP	Special Legend	$14.00

IV. ADHESIVE BACK

CODE	DESCRIPTION
(Blank)	No Adhesive Back
A	Adhesive Back

Upon receipt of your order, legend plates will be set-up as specified and a proof will be sent to you prior to production to ensure accuracy.

To order, submit your drawing to:

Mail: c3controls
Attn: Customer First
PO Box 496
Beaver, PA 15009

Fax: 724.775.5283

Email: legendplates@c3controls.com

To help simplify your order process, templates are available by calling our factory at 724.775.7926 or reference one of the drawings shown on page 12.

Special legend plates are not available for same day shipping.

DISCOUNT SCHEDULE **E**

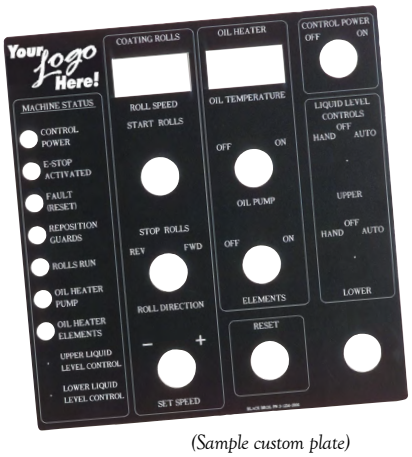

(Sample custom plate)

Custom Legend Plates

- ***Add your Corporate Logo!*** Send us your corporate logo electronically to promote your company image in a clean professional legend plate.
- Available in 2-ply 12" x 24" (304.8mm x 609.6mm) sheets of laminated plastic for custom laser engraving.
- To order, specify part number MLLP-CP (no adhesive back) or MLLP-CP-A (adhesive back).
- Initial Set-Up Fee Per Legend Plate: $50/hour (minimum fee $50.00).
- $2.00/Square Inch (minimum $18.00).
- Design services available. Consult factory for details and hourly rate.
- Custom legend plates are not available for same-day shipping.

To order, submit your drawing to:

Mail: c3controls
Attn: Customer First
PO Box 496
Beaver, PA 15009

Fax: 724.775.5283

Email: legendplates@c3controls.com

LED REPLACEMENT LAMPS

c3controls miniature bayonet base lamps come in a variety of voltage and color options for direct interchangeability to help in choosing the best lamp for your installation. Refer to the chart below to determine the appropriate replacement lamp based on your operator voltage. For lamp technical data, see page 11.

LED Lamps

LED _____ _____
I *II* *III*

To order LED Lamps, the part number would be LED + II + III

I. LAMP TYPE

CODE	DESCRIPTION	LIST
LED	LED Lamp	$28.00

Our LED lamps feature built-in leakage protection.

DISCOUNT SCHEDULE **E**

II. VOLTAGE

CODE	DESCRIPTION
12	12V
24	24V
130	130V

III. LAMP COLOR

CODE	COLOR
AR	Amber
BE	Blue
GN	Green
RD	Red
WE	White

16MM REPLACEMENT LAMP REFERENCE CHART (FOR REFERENCE ONLY - USE CHART ABOVE TO ORDER)

OPERATOR CODE	OPERATOR VOLTAGE	LED (ALL COLORS)	INCANDESCENT	NEON
MFVL12	Full Voltage 12V AC/DC	LED12	FVB12	—
MFVL24	Full Voltage 24V AC/DC	LED24	FVB24	—
MFVL120	Full Voltage 120V AC/DC	LED130	FVB120	FVB120NG or FVB120NR
MRL120L	Resistor 120V AC/DC*	LED24	—	—
MRL125DL	Resistor 125V DC*	LED24	—	—
MRL140DL	Resistor 140V DC*	LED24	—	—
MRL240L	Resistor 240V AC/DC*	LED24	—	—
MRTL6	Dual Input 6V AC/DC	LED6	FVB6	—
MRTL12	Dual Input 12V AC/DC	LED12	FVB12	—
MRTL24	Dual Input 24V AC/DC	LED24	FVB24	—
MRTL120	Dual Input 120V AC/DC	LED130	FVB55	—

*NOTE: Lamps are unique to Resistor Light Units. Refer to side of light unit for correct replacement lamp part number. For assistance, consult factory.

LAMP REMOVAL TOOL

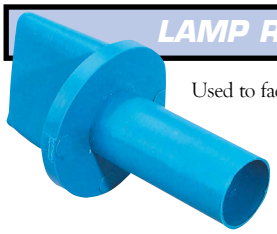

Used to facilitate the removal of lamps.

CODE	DESCRIPTION	LIST
LRT	Lamp Removal Tool	$ 8.00

CLAMP RING WRENCH

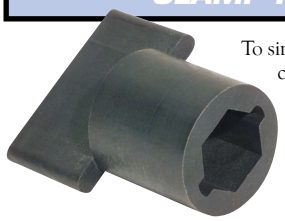

To simplify tightening and loosening of standard clamp rings. Won't scratch your lens or panel.

CODE	DESCRIPTION	LIST
16CRW	16mm Clamp Ring Wrench	$16.00

IP20 TERMINAL GUARD

Our IP20 terminal guard protects against accidental contact with live parts and can be ordered separately as an accessory or factory installed providing the convenience of a single catalog number. NOTE: For factory installed guards, refer to the operator page to determine the appropriate part number.

CODE	FOR USE WITH	LIST
MLIP20	All 16mm Light Modules	$ 4.00

DISCOUNT SCHEDULE **E**

SPECIFICATIONS:

16MM PILOT LIGHTS

ELECTRICAL RATINGS

Lamp	Industry Number	Rated Volts	Lumens (MSCD)	Design Life (Hrs.)	Current Draw (mA)	Lamp Type	Shock & Vibration	Leakage Protection
LED12	**	12V†	Varies w/ Color 2000 mcd Typical	100,000	<20	LED*	Excellent	4 mA
LED24		24V†			<20			4 mA
LED130		120/130V†			<10			2 mA

MULTI-VOLTAGE POWER CONSUMPTION & CURRENT DRAW

System Voltage	AC Current Draw (mA)	DC Current Draw (mA)	Power Consumption (W)
24V	21	20	AC: <1 DC: <1/2
48V	17	7	
120V	3.5	—	
125V	—	3	
240V	2.5	—	
250V	—	2	
277V	2.5	—	

PROTECTION FEATURES

Fused to Fail Open	Yes

* Specify Lamp color when ordering
** Designates a "Special Order" lamp that is not readily available on the open market
† LED voltage tolerance is +/- 10%

	UNITS	
DIELECTRIC STRENGTH (TERMINAL TO GROUND)		2200V for 1 Minute
ENVIRONMENTAL RATINGS		
Operators		Rated and Certified for use in Type 1, 2, 3, 3R, 4/4X, 12 & 13, and IP65
Operating Temperature	°F / °C	-40 to +131 / -40 to +55
Storage Temperature	°F / °C	-40 to +185 / -40 to +85
TERMINAL & WIRING CONSIDERATION		
AWG Conductor		22-12 CU (Copper Only)
Solid Strand Conductor†	mm^2	.5 ~ 4
Fine Strand Conductor†	mm^2	.5 ~ 4
Recommended Torque	Lb-in.	7 – 10
	Nm	0.8 - 1.0

†One or Two wires permitted per termination

MATERIALS		
Operator Housings		Thermoplastic Polyester and Polyester Blends (UV Stabilized for outdoor use)
Structural Parts		Thermoplastic Polyester and Polyester Blends (UV Stabilized for outdoor use)
Terminal Supports		Thermoplastic Polyester and Polyester Blends (UV Stabilized for outdoor use)
Pilot Light Lens		High Impact Polycarbonate (UV Stabilized for outdoor use)
Seals		Neoprene Gaskets
Front Mounting Nut/Clamp Ring		Brass (Plated and Unplated)
Light Terminations		Brass (Plated and Unplated)
Terminal Screws		Plated Steel - Self Lifting Clamps
ROHS COMPLIANCE		For RoHS compliance documentation by product, refer to c3controls.com

FULL VOLTAGE/RESISTOR INDICATING PILOT LIGHT (SHORT CASE)

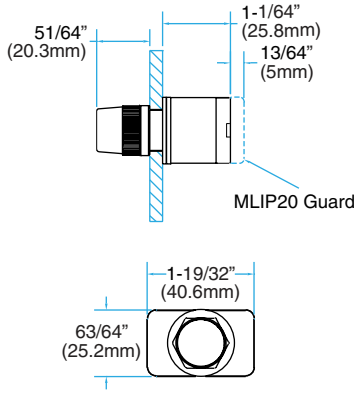

RESISTOR 140V & 240V INDICATING PILOT LIGHT (LONG CASE)

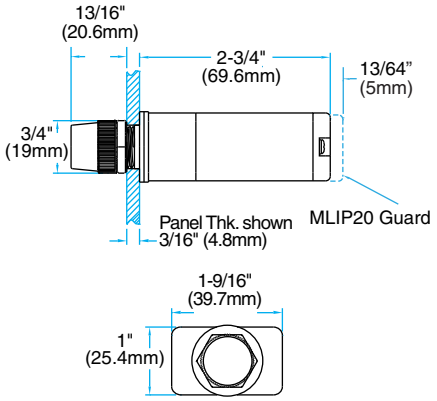

MULTI-VOLTAGE AND RESISTOR 120V & 125V INDICATING PILOT LIGHT

Non-Relampable & Relampable

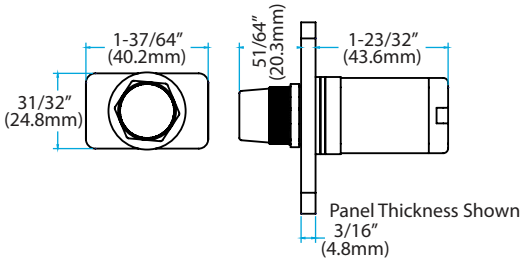

LEGEND PLATE TEMPLATES

Standard 2" x 2" (MLLP)

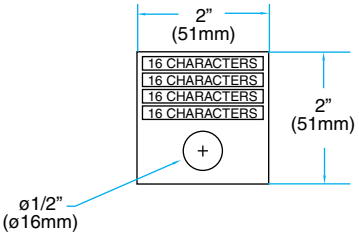

Horizontal 1" x 2" (MLLPH)

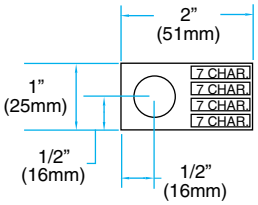

Vertical 2" x 1" (MLLPV)

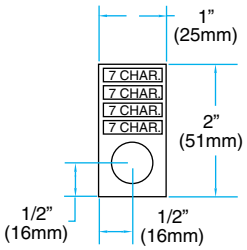

MOUNTING HOLE PATTERN

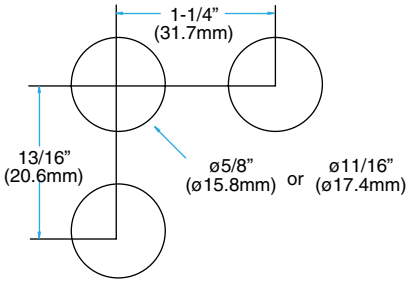

MOUNTING GASKETS

PANEL THICKNESS IN DECIMALS	# OF GASKETS NEEDED 3/16" (4.8mm)	& 1/16" (1.6mm)
less than .06	1	2
.06 – .120	1	1
.120 – .180	1	0
.180 – .240	0	2
.240 – .300	0	1

NOTE: Remove one 1/16" (1.6mm) gasket when using a legend plate.

- Mounting Hole in Panel – 5/8" (16mm).
- Fully-assembled operators come standard with one 3/16" (4.8mm) and two 1/16" (1.6mm) gaskets.