Part Details		
Material	Volume	Stock Number
Generic	2570602.279 mm^3	CPT1-2000-XX-XX

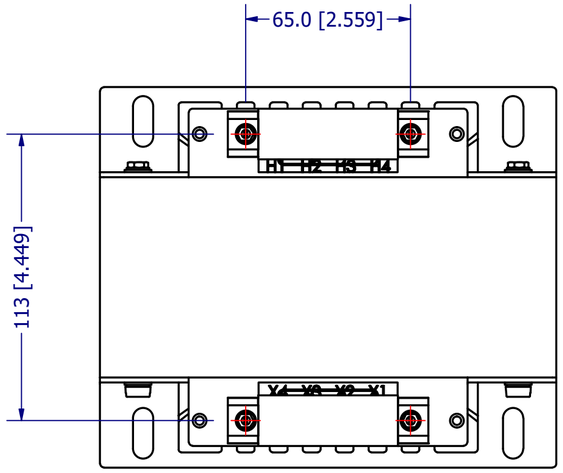

TOP VIEW

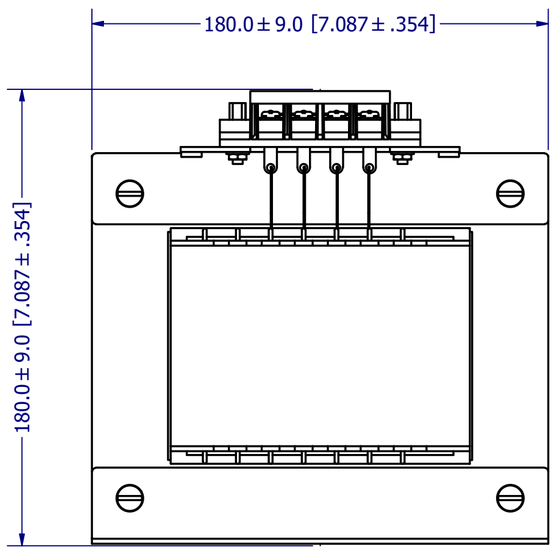

FRONT VIEW

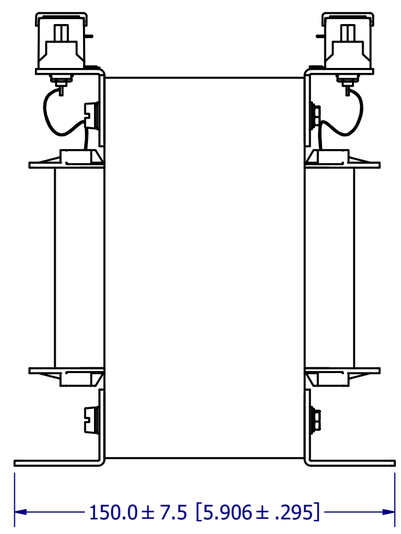

SIDE VIEW

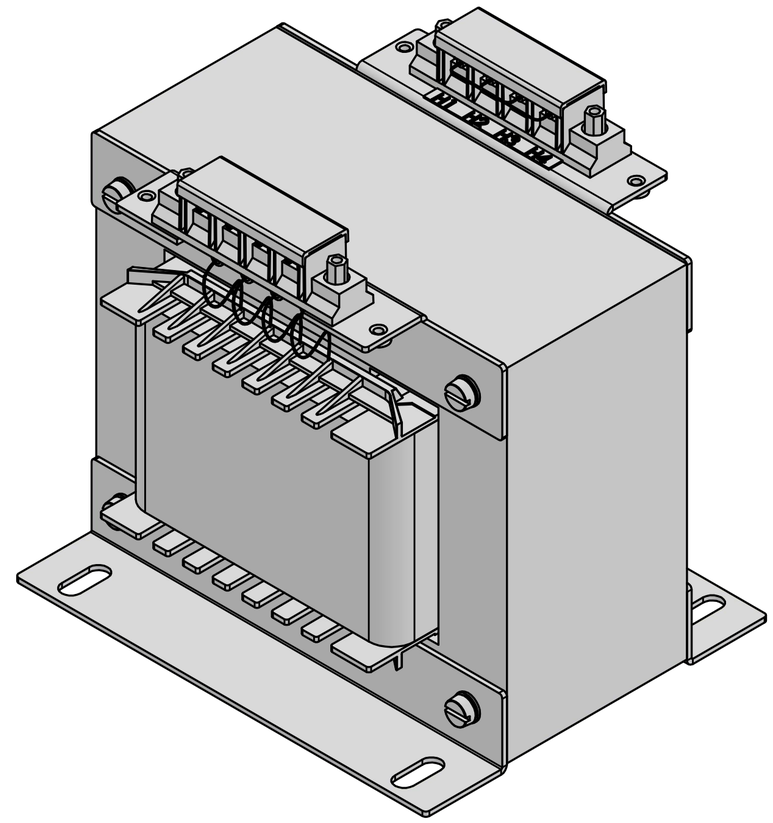

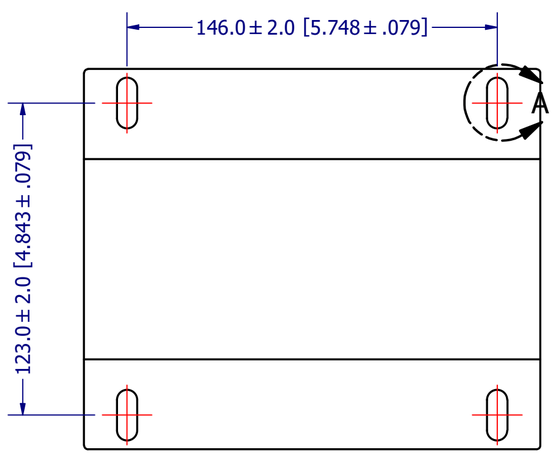

MOUNTING DIMENSION

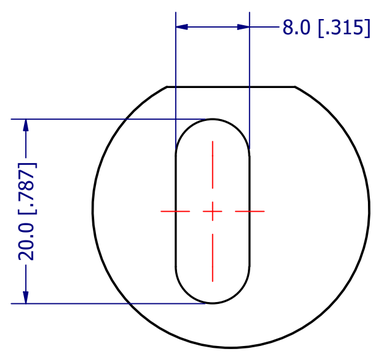

DETAIL A
SCALE 2 : 1

Sr.No	CODE	Primary Voltage	Secondary Voltage
1	RD-FD	220/230/240V, 440/460/480V	110/115/120V, 220/230/240V
2	TS-DS	550/575/600V	110/115/120V
3	RM-FD	380V, 400V, 415V	110V, 220V
4	PM-DS	208V, 277V	120V

REV	DATE	DESCRIPTION	CHGD BY	APVD BY
2	22/04/2026	Overall Dimension Changed and tolerance added	AM	CB
1	01/08/2025	RELEASED	AM	CB

REVISION HISTORY

TOLERANCE
XXX. +/- 1.00 [0.040]
XX.X +/- 0.25 [0.010]
X.XX +/- 0.13 [0.005]
ANGLES +/- 0.5 DEG

UNLESS OTHERWISE SPECIFIED

This drawing is the property of c3controls. This drawing may not be copied, used or disclosed, for any purpose except as authorized in writing by c3controls.

Units: mm [in]
Drawn By: Amit Mane
Modeled By: Amit Mane
Approved By: Cory Bunnell
Created On: 01-08-2025

c3controls®
P.O. BOX 496 BEAVER, PA 15009 www.c3controls.com

Description: Control Power Transformer 2000VA

Rev #: 2
Size: C
Scale:
Part Number: 15X30011