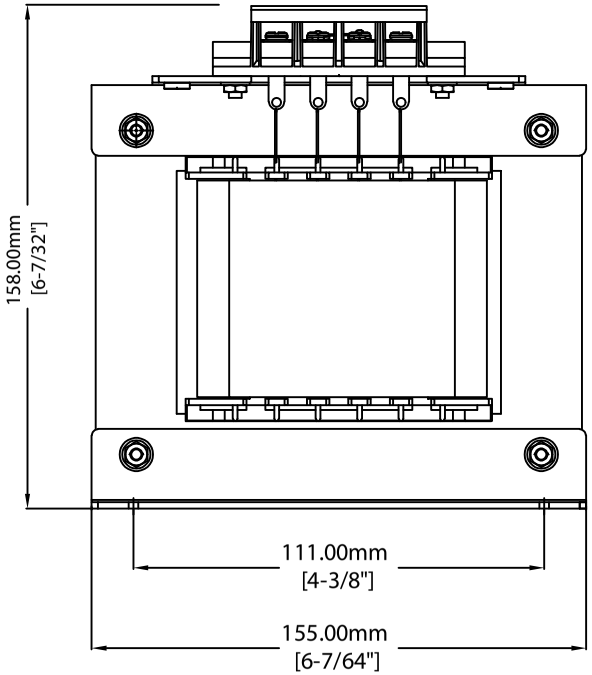

FRONT VIEW

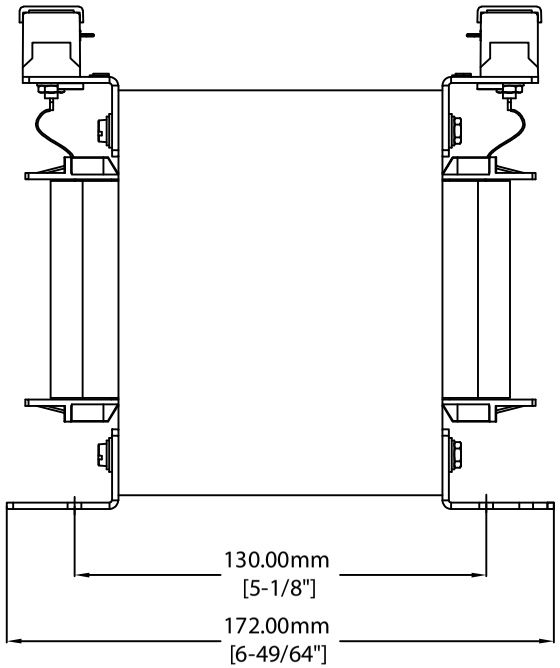

SIDE VIEW

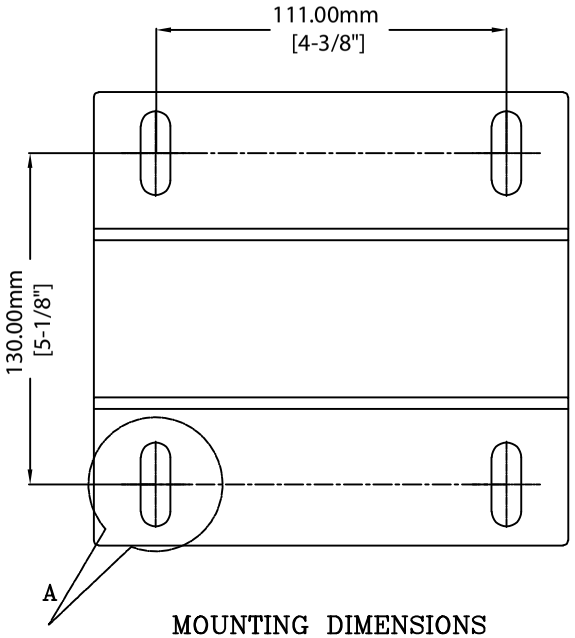

MOUNTING DIMENSIONS

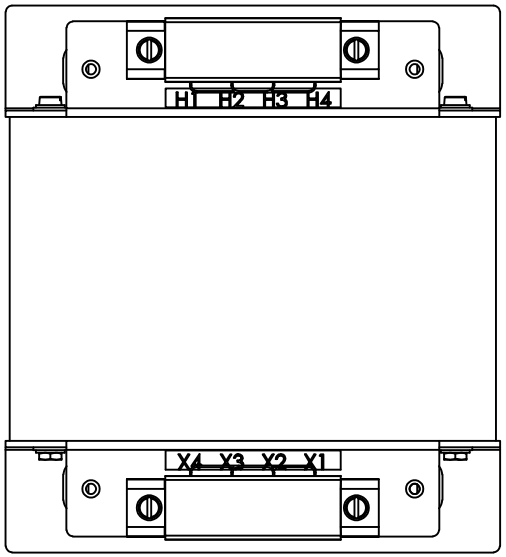

TOP VIEW

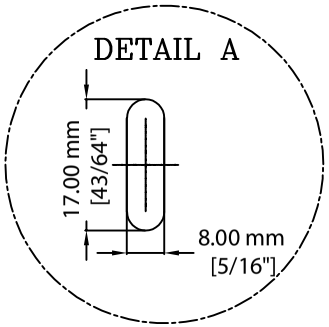

Sr.No.	CODE	Primary Voltage	Secondary Voltage
1	RD-FD	220/230/240 & 440/460/480V	110/115/120 & 220/230/240V
2	TS-DS	550/575/600V	110/115/120V
3	PM-DS	0/208/277V	120V
4	RM-FD	0/380/400/415V	110 & 220V

REV	DATE	DESCRIPTION	CHGD BY	APVD BY
1	05/05/2025	MOUNTING SLOT LENGTH INCREASED	A.M	P.S
1	05/12/2024	RELEASED	A.VV	P.S

REVISION HISTORY

TOLERANCE
XXX. +/- 1.00 [0.040]
XX.X +/- 0.25 [0.010]
X.XX +/- 0.13 [0.005]
ANGLES +/- 0.5 DEG

UNLESS OTHERWISE SPECIFIED

This drawing is the property of c3controls. This drawing may not be copied, used or disclosed, for any purpose except as authorized in writing by c3controls.

Units: mm [in]
Drawn By: A.V.V
Modeled By: H.M
Approved By: P.S
Created On: 27/09/2024

c3controls
P.O. BOX 496 BEAVER, PA 15009 www.c3controls.com

Description: CONTROL POWER TRANSFORMER 1500VA

Rev #: 1
Size: --
Scale: NTS
Part Number: CPT1-1500-XX-XX