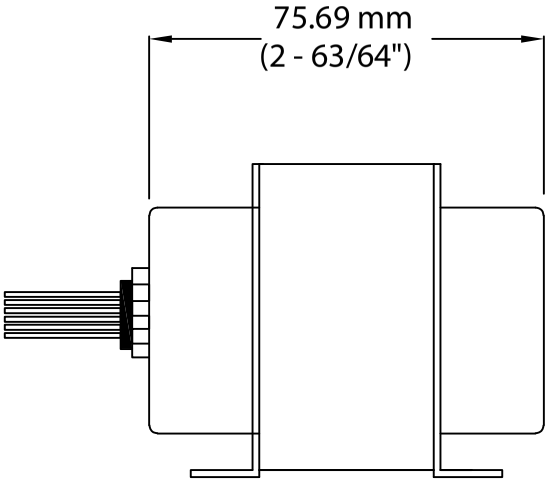

FRONT VIEW

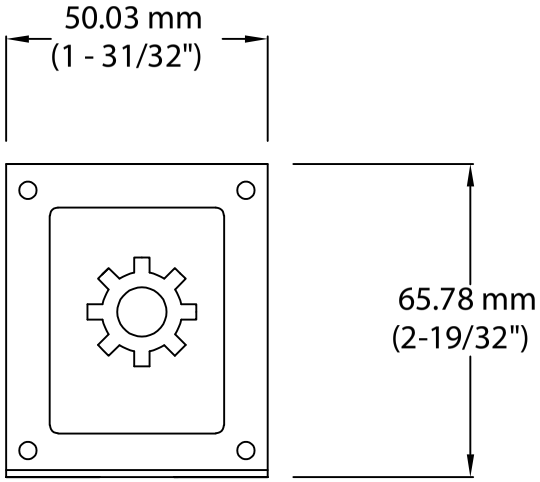

SIDE VIEW

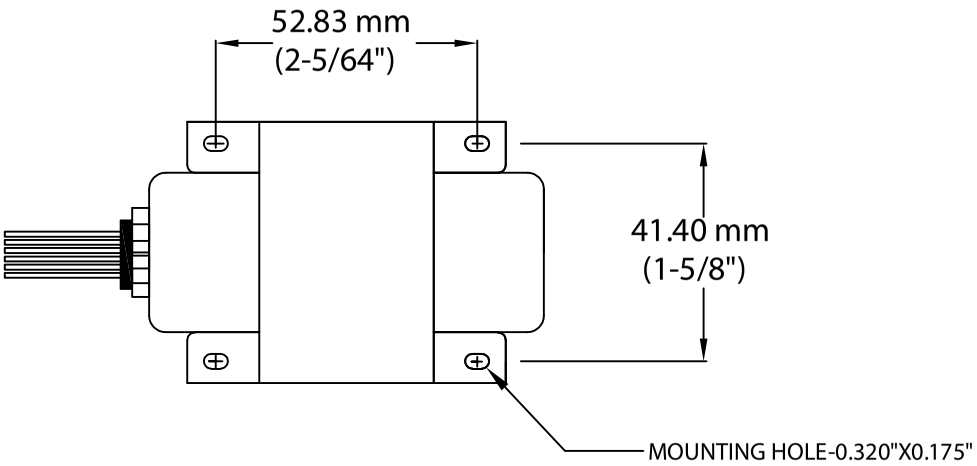

TOP VIEW

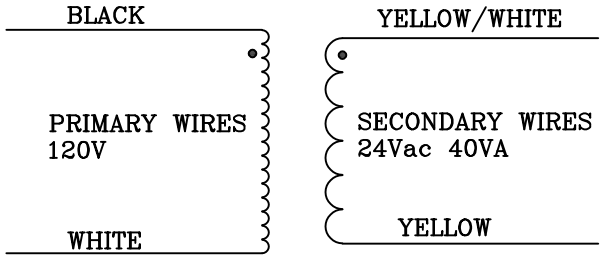

SECONDARY YEL/'WHT WIRE IN PHASE
WITH PRIMARY BLACK WIRE

TOLERANCE XXX. +/- 1.00 [0.040] XX.X +/- 0.25 [0.010] X.XX +/- 0.13 [0.005] ANGLES +/- 0.5 DEG UNLESS OTHERWISE SPECIFIED	Units: mm [in] Drawn By: Y.K. Modeled By: Y.K. Approved By: U.S. Created On: 11/01/2024	c3controls® P.O. BOX 496 BEAVER, PA 15009 www.c3controls.com Description: 40VA, Primary 120V, Secondary 24V, Inherent Protection, UL 5085-3 (Class 2)
This drawing is the property of c3controls. This drawing may not be copied, used or disclosed, for any purpose except as authorized in writing by c3controls.		Rev #: 1 · Size: C · Scale: NTS · Part Number: CCT1-40-DSCS-I