Part Details		
Material	Volume	Stock Number
Generic	119190.59 mm^3	1100-SP3X2XXX

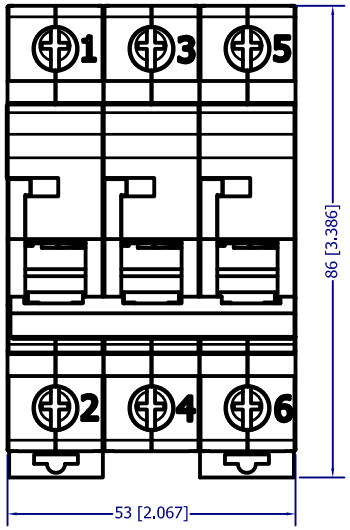

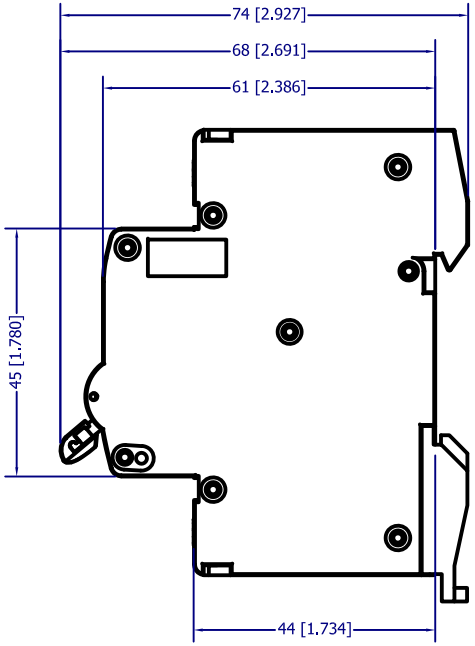

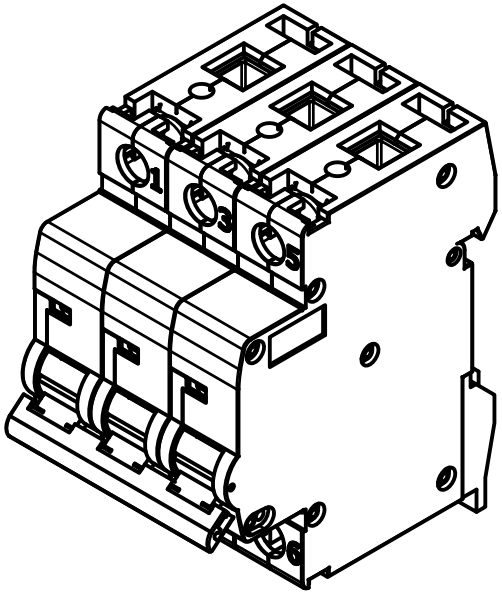

REV	DATE	DESCRIPTION	CHGD BY	APVD BY
1	3/26/20	Released		CB

REVISION HISTORY

TOLERANCE
XXX. +/- 1.00 [0.040]
XX.X +/- 0.25 [0.010]
X.XX +/- 0.13 [0.005]
ANGLES +/- 0.5 DEG

UNLESS OTHERWISE SPECIFIED

This drawing is the property of c3controls. This drawing may not be copied, used or disclosed, for any purpose except as authorized in writing by c3controls.

Units: mm [in]
Drawn By: Rohit
Modeled By: cbunnell
Approved By: cbunnell
Created On: 9/30/2019

c3controls®
P.O. BOX 496 BEAVER, PA 15009 www.c3controls.com

Description: 1100 Series MCB, UL 1077, Three Pole Assembly

Rev #: 1
Size: C
Scale: N/A
Part Number: 11C10064X01