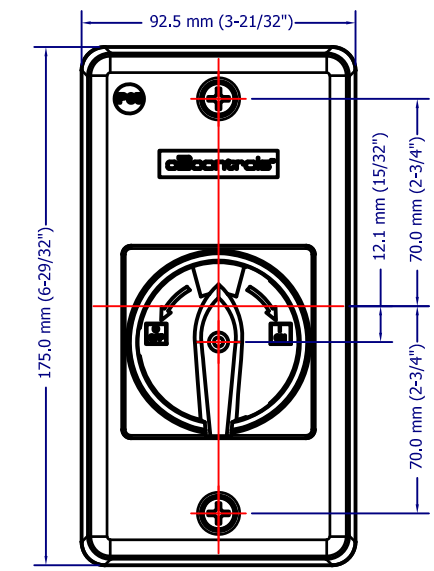

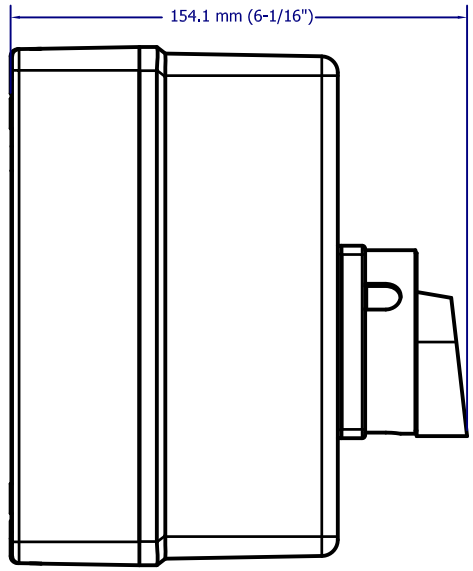

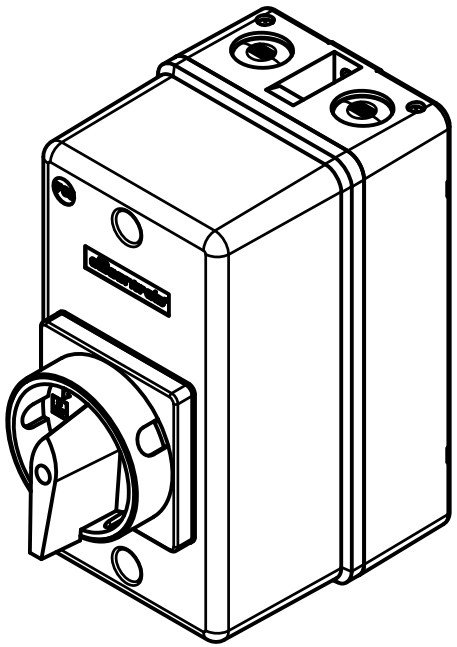

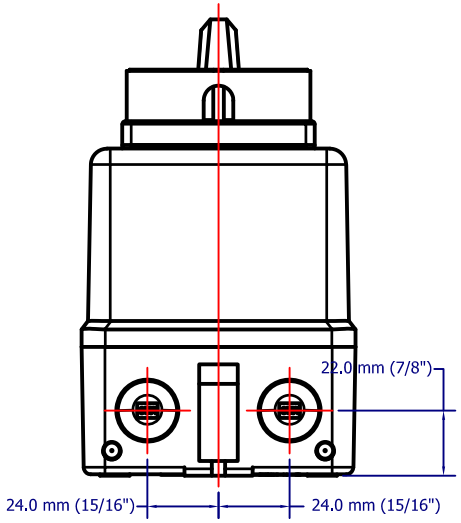

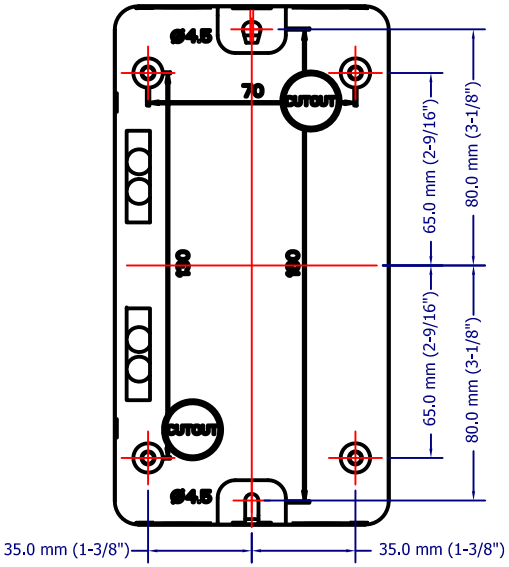

REV	DATE	DESCRIPTION	CHGD BY	APVD BY
1	5/1/17	Released		NT

REVISION HISTORY

TOLERANCE
XXX. +/- 1.00 [0.040]
XX.X +/- 0.25 [0.010]
X.XX +/- 0.13 [0.005]
ANGLES +/- 0.5 DEG

UNLESS OTHERWISE SPECIFIED

This drawing is the property of c3controls. This drawing may not be copied, used or disclosed, for any purpose except as authorized in writing by c3controls.

Units: mm [in]

Drawn By: cbunnell

Modeled By: Mike Shanahan

Approved By: N. Tempalski

Created On: 4/28/2017

c3controls®
P.O. BOX 496 BEAVER, PA 15009 www.c3controls.com

Description: E330, Motor Protection Circuit Breaker Enclosure Frame 1, Red/Yellow Handle

Rev #	Size	Scale	Part Number
1	C	N/A	12M90042G01