3/16" 2
1/4" 1
* REMOVE ONE ADDITIONAL GASKET WHEN USING A LEGEND PLATE

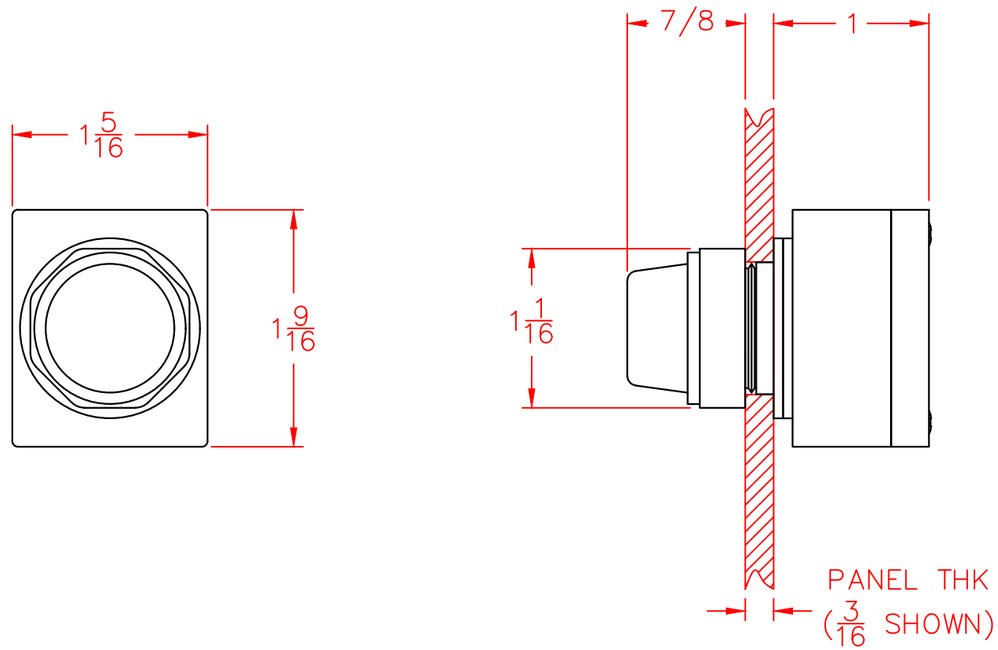

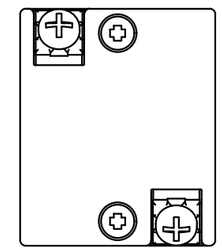

FULL VOLTAGE LIGHT
6 TO 600 VOLTS AC/DC
3W MAX
RATED NEMA 4/4X

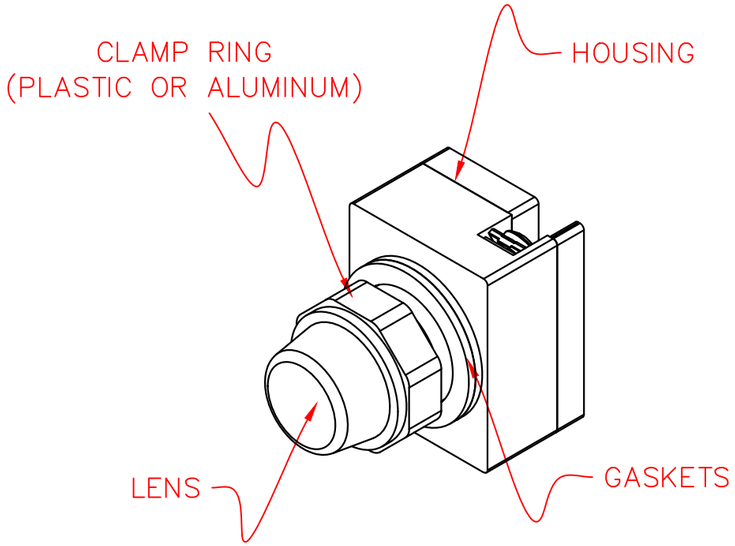

NOTES:

1) MOUNTING HOLE IN PANEL – ø7/8 (22MM)

2) MOUNTING HOLE SPACING (FOR STANDARD LEGE PLATES) – HORIZONTIAL & VERTICAL DISTANCE – 1.750 CENTER TO CENTER

3) CHOICE OF ALUMINUM OR PLASTIC CLAMP RING (NEMA 4 OR NEMA 4X). CLAMP RINGS FIT CONTROI CONCEPTS 22MM PRODUCT LINE

REV	DESCRIPTION	DATE	BY
XXX	XXXXXXXXXXX	XXXX	XXX
XXX	XXXXXXXXXXX	XXXX	XXX
XXX	XXXXXXXXXXX	XXXX	XXX
XXX	XXXXXXXXXXX	XXXX	XXX
XXX	XXXXXXXXXXX	XXXX	XXX
XXX	XXXXXXXXXXX	XXXX	XXX

22MM PRODUCT LINE
FULL VOLTAGE LIGHT
DATA SHEET

DRAWN BY: RCG
DATE: 08–17

CONTROL CONCEPTS CORP.
P.O. BOX 496
664 STATE STREET
BEAVER, PA 15009

SCALE: 1:1
DRAWING NO. WC1000